BEF HOME

fire for your heart

CATALOGUE OF HOT AIR STOVES

BEF HOME
fire for your heart

CZ | Kotvrdovice 277
679 07 Kotvrdovice
Czech Republic

tel.: +420 516 428 240
e-mail: info@bef.cz
IČ: 25 52 46 82
DIČ: CZ 25 52 46 82

SK | Turá Lúka 97
907 03 Myjava
Slovakia

tel.: +421 346 216 790
e-mail: info@bef.sk

PL | Bąków ul. Główna 4a
43-246 Strumień
Poland

tel.: +48 530 712 534
tel.: +48 530 712 624
e-mail: info@befpolska.pl

FR | 1 Place de l'Homme de Fer
67 000 Strasbourg
France

tél.: 00 33 672 383 113
e-mail: info@foyers-bef.fr

BEF **ARIES 3**

BImSchV
Stufe 2

15a
B - VG

ČSN EN
13229

White
Pearl Beige
Latte
Mocca
Antracit
Bordeaux
Ferrari
Azzurro

3 - 6 kW | 83 % | 150 mm | a: 500 mm b: 200 mm | 200 x 170 mm | 300 x 668 mm

12 Pa | 1,72 kg/h | 194 °C | 6,6 g/s | 0,0532 % | 23 mg/Nm³ | 155 kg

BEF **ARIES 3 E**

BImSchV
Stufe 2

15a
B - VG

ČSN EN
13229

White
Pearl Beige
Latte
Mocca
Antracit
Bordeaux
Ferrari
Azzurro

3 - 6 kW | 83 % | 150 mm | a: 500 mm b: 200 mm | 200 x 200 mm | 300 x 300 x 668 mm

12 Pa | 1,72 kg/h | 194 °C | 6,6 g/s | 0,0532 % | 23 mg/Nm³ | 139 kg

BEF **ARIES 3 ER**

BImSchV
Stufe 2

15a
B - VG

ČSN EN
13229

White
Pearl Beige
Latte
Mocca
Antracit
Bordeaux
Ferrari
Azzurro

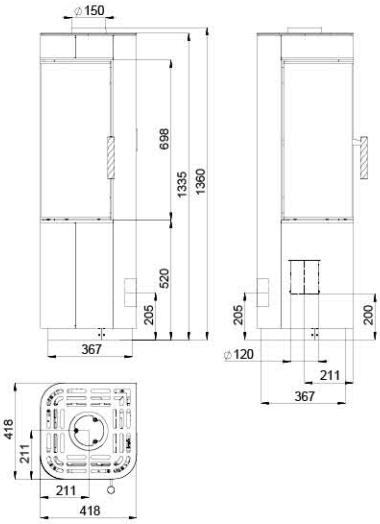

3 - 6 kW | 83 % | 150 mm | a: 500 mm b: 200 mm | 200 x 200 mm | 300 x 300 x 668 mm

12 Pa | 1,72 kg/h | 194 °C | 6,6 g/s | 0,0532 % | 23 mg/Nm³ | 142 kg

BEF **ARIES 7**

BImSchV
Stufe 2

15a
B - VG

ČSN EN
13229

White
Pearl Beige
Latte
Mocca
Antracit
Bordeaux
Ferrari
Azzurro

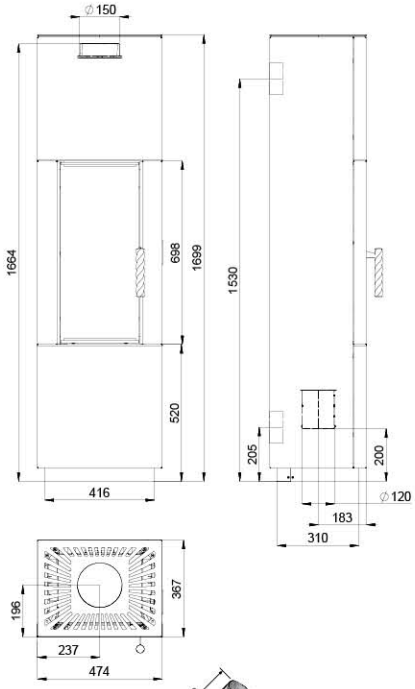

3 - 6 kW | 83 % | 150 mm | a: 500 mm b: 200 mm | 200 x 170 mm | 300 x 668 mm

12 Pa | 1,72 kg/h | 194 °C | 6,6 g/s | 0,0532 % | 23 mg/Nm³ | 166 kg

BEF **ARIES 7 E**

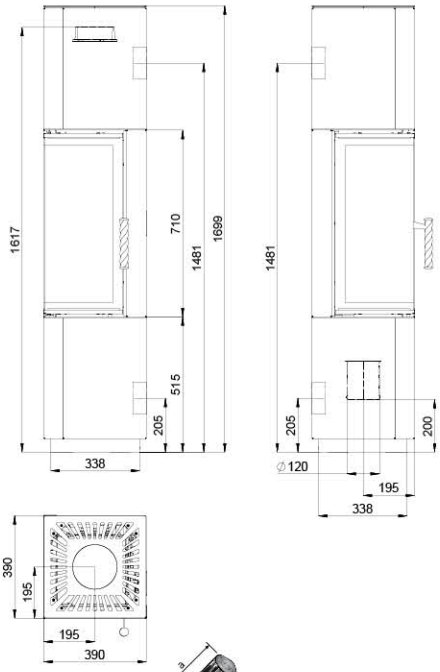

BImSchV
Stufe 2

15a
B - VG

ČSN EN
13229

White
Pearl Beige
Latte
Mocca
Antracit
Bordeaux
Ferrari
Azzurro

3 - 6 kW | 83 % | 150 mm | a: 500 mm b: 200 mm | 200 x 200 mm | 300 x 300 x 668 mm

12 Pa | 1,72 kg/h | 194 °C | 6,6 g/s | 0,0532 % | 23 mg/Nm³ | 154 kg

BEF **ARIES 7 ER**

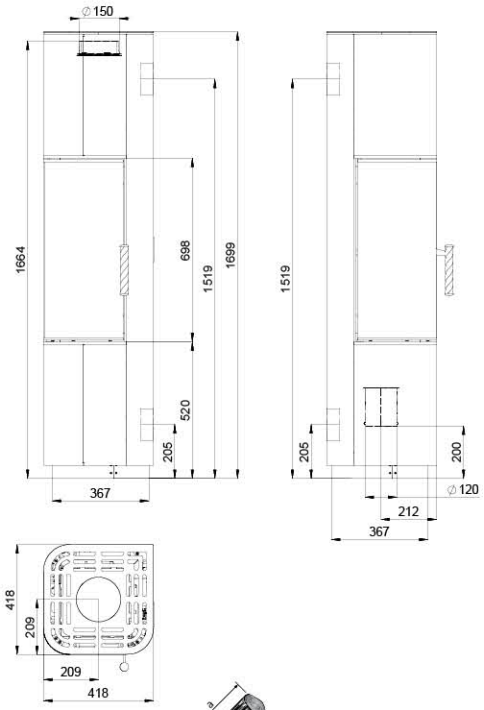

BImSchV
Stufe 2

15a
B - VG

ČSN EN
13229

White
Pearl Beige
Latte
Mocca
Antracit
Bordeaux
Ferrari
Azzurro

3 - 6 kW | 83 % | 150 mm | a: 500 mm b: 200 mm | 200 x 200 mm | 300 x 300 x 668 mm

12 Pa | 1,72 kg/h | 194 °C | 6,6 g/s | 0,0532 % | 23 mg/Nm³ | 158 kg

BEF **VIRGO 7**

BImSchV
Stufe 2

15a
B - VG

ČSN EN
13229

White
Pearl Beige
Latte
Mocca
Antracit
Bordeaux
Ferrari
Azzurro

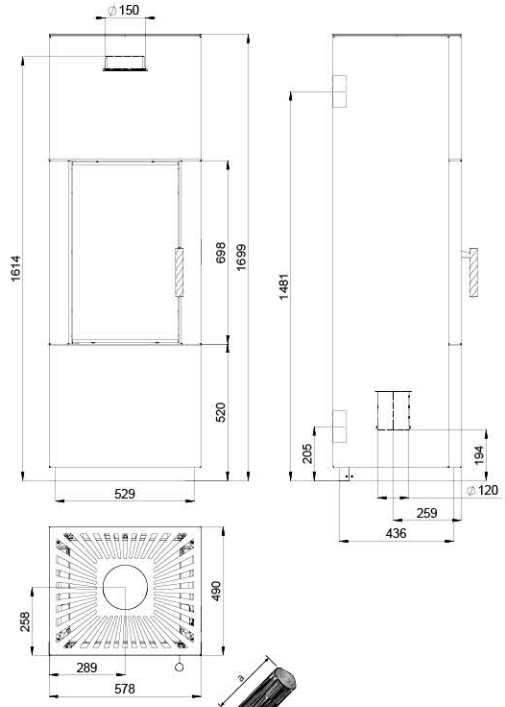

5 - 8 kW | 82 % | 150 mm | a: 500 mm b: 250 mm | 300 x 300 mm | 904 x 668 mm

12 Pa | 2,28 kg/h | 211 °C | 8,1 g/s | 0,0687 % | 20 mg/Nm³ | 236 kg

BEF **VIRGO 7 E**

BImSchV
Stufe 2

15a
B - VG

ČSN EN
13229

White
Pearl Beige
Latte
Mocca
Antracit
Bordeaux
Ferrari
Azzurro

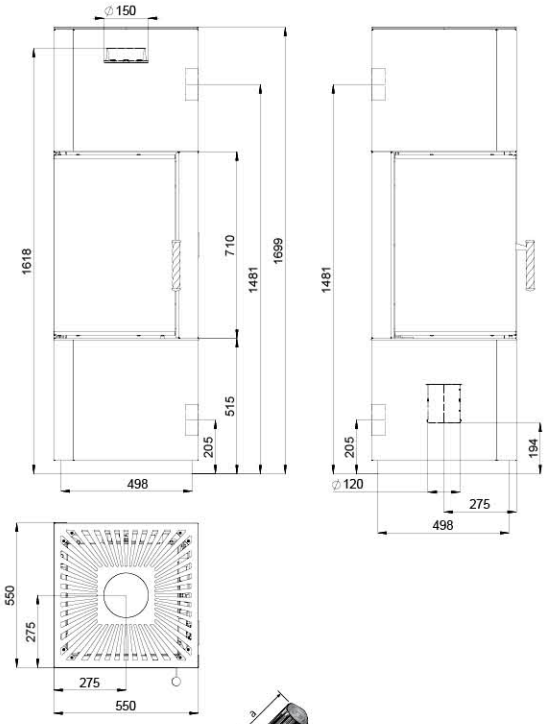

5 - 8 kW | 82 % | 150 mm | a: 500 mm b: 250 mm | 300 x 300 mm | 460 x 460 x 668 mm

12 Pa | 2,28 kg/h | 211 °C | 8,1 g/s | 0,0687 % | 20 mg/Nm³ | 224 kg

BEF **KOMPAKT FEEL 6**

White
Pearl Beige
Latte
Mocca
Antracit
Bordeaux
Ferrari
Azzurro

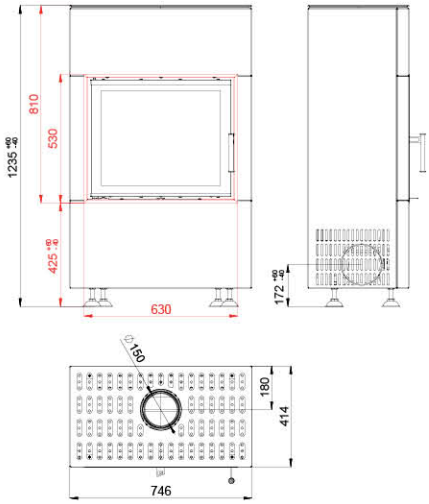

3 - 6 kW | 84 % | 150 mm | 330 mm | 435 x 220 mm | 570 x 468 mm

12 Pa | 1,53 kg/h | 206 °C | 4,3 g/s | 0,0946 % | 17 mg/Nm³ | 187 kg

BEF **KOMPAKT FEEL 6 CL/CP**

White
Pearl Beige
Latte
Mocca
Antracit
Bordeaux
Ferrari
Azzurro

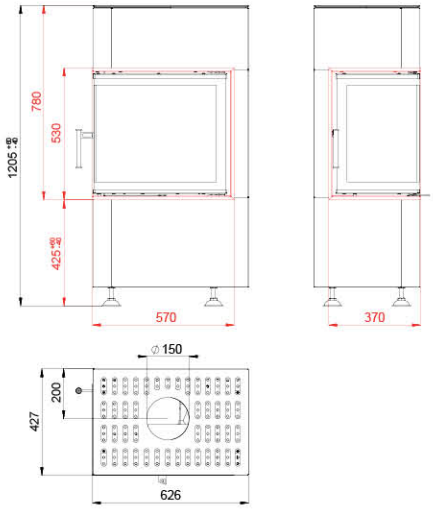

3 - 6 kW | 84 % | 150 mm | 330 mm | 395 x 215 mm | 530 x 330 x 468 mm

12 Pa | 1,53 kg/h | 206 °C | 4,3 g/s | 0,0946 % | 17 mg/Nm³ | 167 kg

BEF **KOMPAKT FEEL 7**

White
Pearl Beige
Latte
Mocca
Antracit
Bordeaux
Ferrari
Azzurro

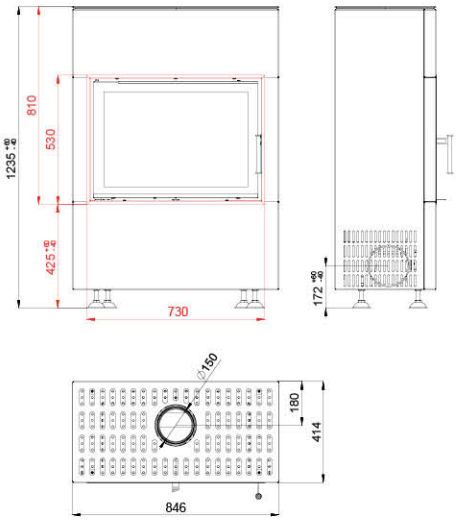

4 - 7 kW | 82 % | 150 mm | 500 mm | 520 x 220 mm | 670 x 468 mm

12 Pa | 2,47 kg/h | 232 °C | 6,5 g/s | 0,0811 % | 18 mg/Nm³ | 206 kg

BEF **KOMPAKT FEEL 7 CL/CP**

White
Pearl Beige
Latte
Mocca
Antracit
Bordeaux
Ferrari
Azzurro

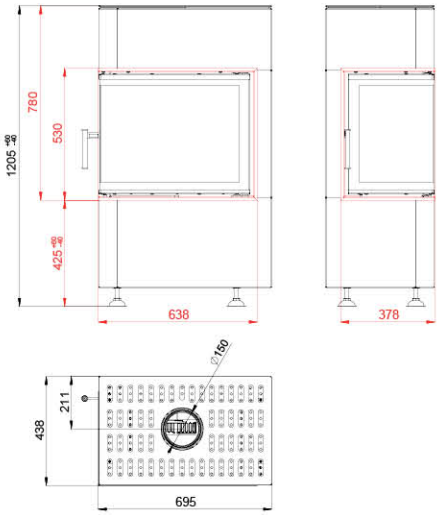

4 - 7 kW | 82 % | 150 mm | 400 mm | 465 x 215 mm | 600 x 340 x 468 mm

12 Pa | 2,47 kg/h | 232 °C | 6,5 g/s | 0,0811 % | 18 mg/Nm³ | 177 kg

BEF **KOMPAKT FEEL 8**

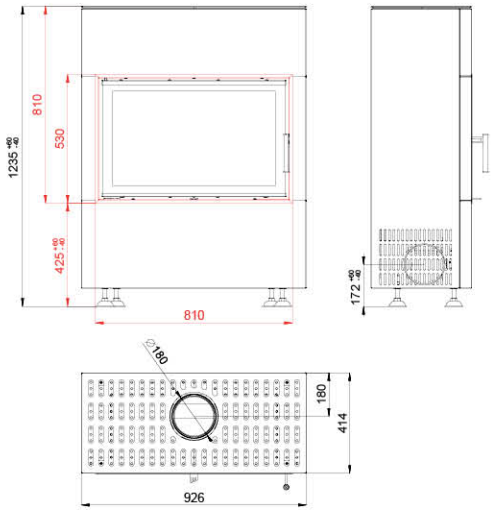

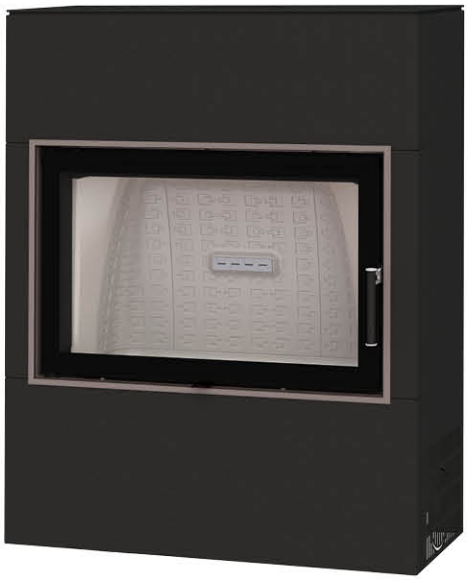

5 - 8 kW | 85 % | 180 mm | 500 mm | 600 x 220 mm | 750 x 468 mm

12 Pa | 2,54 kg/h | 212 °C | 6 g/s | 0,0932 % | 16 mg/Nm³ | 223 kg

BEF **KOMPAKT FEEL 8 CL/CP**

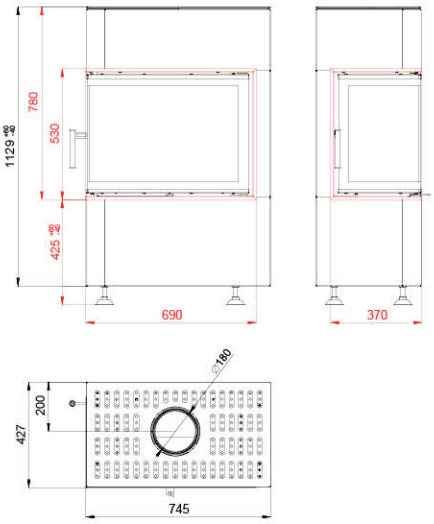

5 - 8 kW | 85 % | 180 mm | 500 mm | 515 x 215 mm | 650 x 330 x 468 mm

12 Pa | 2,54 kg/h | 212 °C | 6 g/s | 0,0932 % | 16 mg/Nm³ | 190 kg

BEF **KOMPAKT FEEL 6 PASSIVE**

White
Pearl Beige
Latte
Mocca
Antracit
Bordeaux
Ferrari
Azzurro

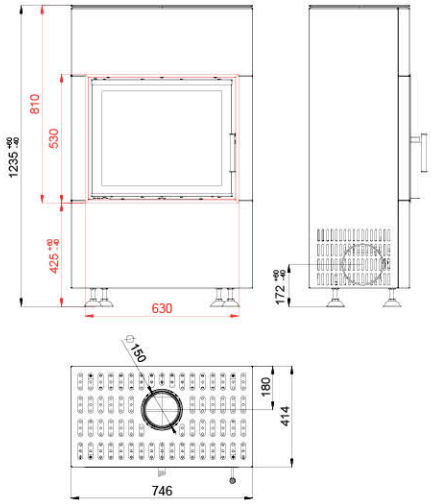

3 - 6 kW | 86 % | 150 mm | 400 mm | 400 x 218 mm | 570 x 468 mm

12 Pa | 1,15 kg/h | 193 °C | 3 g/s | 0,0814 % | 16 mg/Nm³ | 192 kg

BEF **KOMPAKT FEEL 6 CL/CP PASSIVE**

White
Pearl Beige
Latte
Mocca
Antracit
Bordeaux
Ferrari
Azzurro

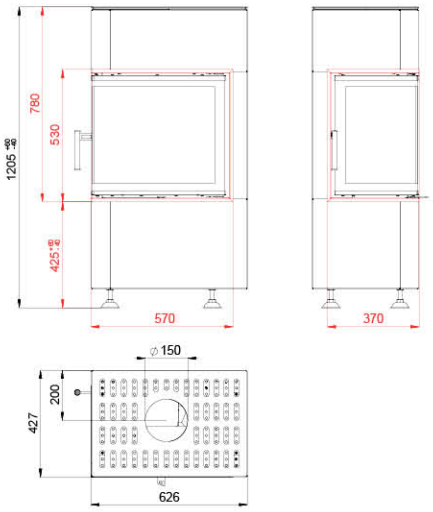

3 - 6 kW | 86 % | 150 mm | 330 mm | 370 x 211 mm | 530 x 330 x 468 mm

12 Pa | 1,15 kg/h | 193 °C | 3 g/s | 0,0814 % | 16 mg/Nm³ | 172 kg

BEF **KOMPAKT FEEL 7 PASSIVE**

White
Pearl Beige
Latte
Mocca
Antracit
Bordeaux
Ferrari
Azzurro

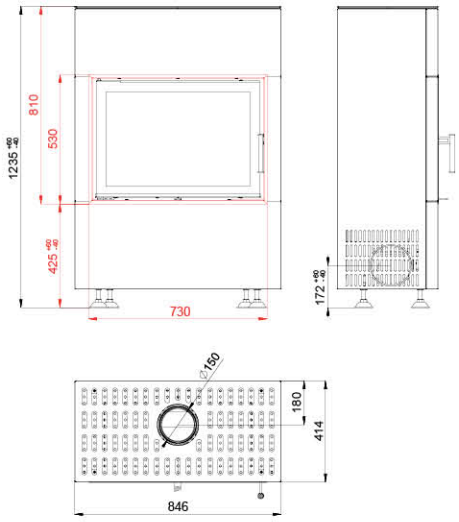

4 - 7 kW | 84 % | 150 mm | 400 mm | 494 x 218 mm | 2x 670 x 468 mm

12 Pa | 1,48 kg/h | 201 °C | 4,2 g/s | 0,0893 % | 16 mg/Nm³ | 211 kg

BEF **KOMPAKT FEEL 7 CL/CP PASSIVE**

White
Pearl Beige
Latte
Mocca
Antracit
Bordeaux
Ferrari
Azzurro

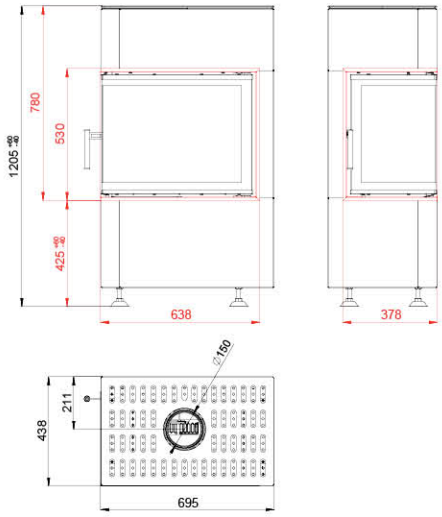

4 - 7 kW | 84 % | 150 mm | 400 mm | 440 x 211 mm | 2x 600 x 340 x 468 mm

12 Pa | 1,48 kg/h | 201 °C | 4,2 g/s | 0,0893 % | 16 mg/Nm³ | 182 kg

BEF **KOMPAKT FEEL 8 PASSIVE**

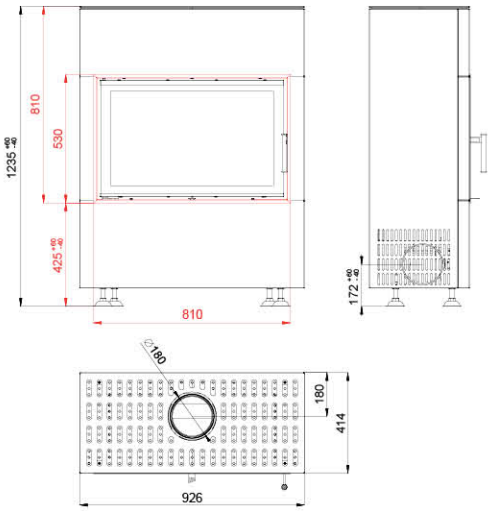

White
Pearl Beige
Latte
Mocca
Antracit
Bordeaux
Ferrari
Azzurro

5 - 8 kW | 84 % | 180 mm | 500 mm | 568 x 218 mm | 750 x 468 mm

12 Pa | 1,84 kg/h | 215 °C | 4,9 g/s | 0,0943 % | 18 mg/Nm³ | 228 kg

BEF **KOMPAKT FEEL 8 CL/CP PASSIVE**

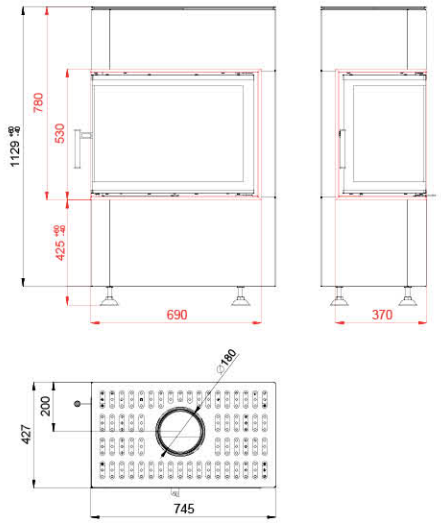

White
Pearl Beige
Latte
Mocca
Antracit
Bordeaux
Ferrari
Azzurro

5 - 8 kW | 84 % | 180 mm | 400 mm | 490 x 211 mm | 650 x 330 x 468 mm

12 Pa | 1,84 kg/h | 215 °C | 4,9 g/s | 0,0943 % | 18 mg/Nm³ | 195 kg

BEF **KOMPAKT THERM 6**

White
Pearl Beige
Latte
Mocca
Antracit
Bordeaux
Ferrari
Azzurro

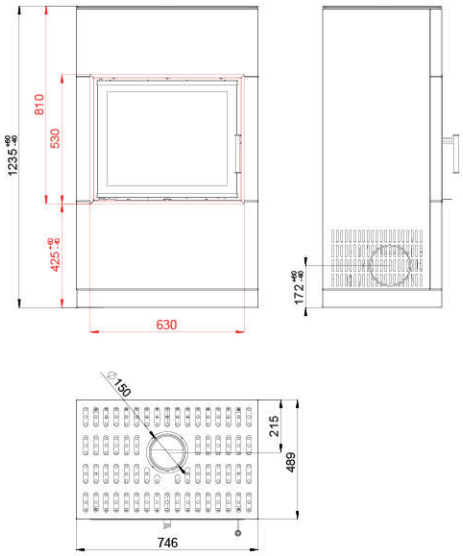

4 - 7 kW | 82 % | 150 mm | 330 mm | 435 x 295 mm | 570 x 468 mm

12 Pa | 1,85 kg/h | 262 °C | 4,6 g/s | 0,0873 % | 19 mg/Nm³ | 217 kg

BEF **KOMPAKT THERM 6 CL/CP**

White
Pearl Beige
Latte
Mocca
Antracit
Bordeaux
Ferrari
Azzurro

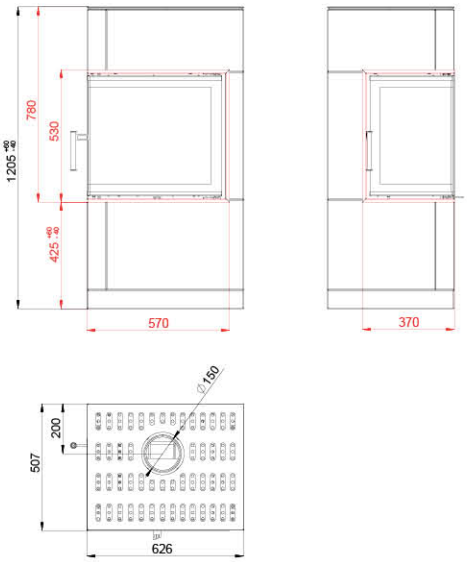

4 - 7 kW | 82 % | 150 mm | 330 mm | 395 x 295 mm | 530 x 330 x 468 mm

12 Pa | 1,85 kg/h | 262 °C | 4,6 g/s | 0,0873 % | 19 mg/Nm³ | 189 kg

BEF **KOMPAKT THERM 7**

White
Pearl Beige
Latte
Mocca
Antracit
Bordeaux
Ferrari
Azzurro

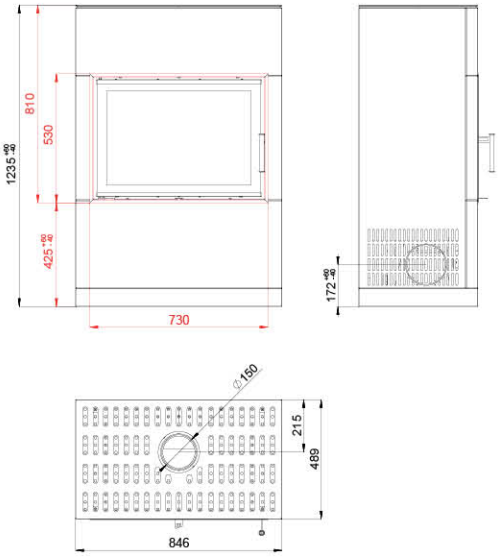

5 - 8 kW | 82 % | 150 mm | 500 mm | 520 x 295 mm | 670 x 468 mm

12 Pa | 2,05 kg/h | 264 °C | 5,6 g/s | 0,0868 % | 19 mg/Nm³ | 239 kg

BEF **KOMPAKT THERM 7 CL/CP**

White
Pearl Beige
Latte
Mocca
Antracit
Bordeaux
Ferrari
Azzurro

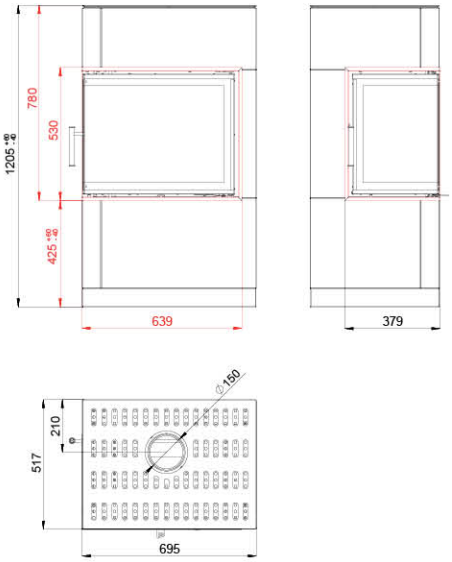

5 - 8 kW | 82 % | 150 mm | 400 mm | 465 x 295 mm | 600 x 340 x 468 mm

12 Pa | 2,05 kg/h | 264 °C | 5,6 g/s | 0,0868 % | 19 mg/Nm³ | 214 kg

BEF **KOMPAKT THERM 8**

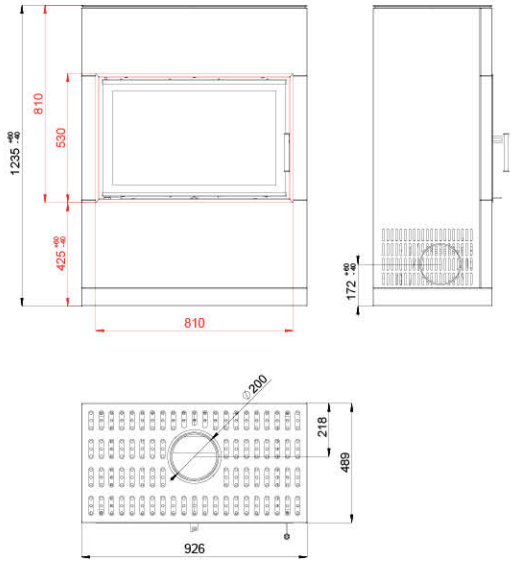

White
Pearl Beige
Latte
Mocca
Antracit
Bordeaux
Ferrari
Azzurro

7 - 10 kW | 84 % | 200 mm | 500 mm | 600 x 295 mm | 750 x 468 mm

12 Pa | 2,7 kg/h | 257 °C | 6 g/s | 0,0868 % | 18 mg/Nm³ | 256 kg

BEF **KOMPAKT THERM 8 CL/CP**

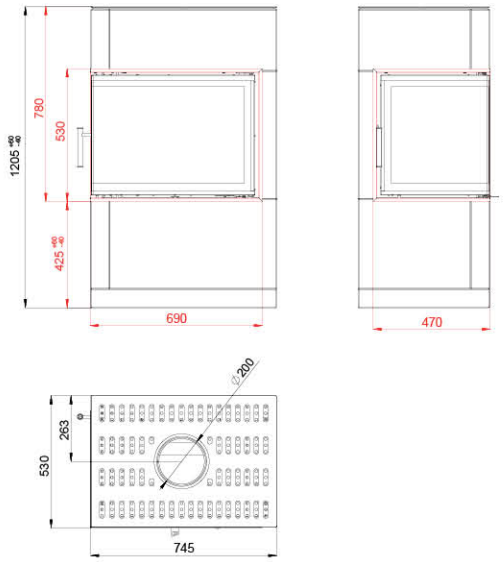

White
Pearl Beige
Latte
Mocca
Antracit
Bordeaux
Ferrari
Azzurro

7 - 10 kW | 84 % | 200 mm | 500 mm | 515 x 295 mm | 650 x 330 x 468 mm

12 Pa | 2,7 kg/h | 257 °C | 6 g/s | 0,0868 % | 18 mg/Nm³ | 226 kg

BEF **KOMPAKT THERM 6 PASSIVE**

White
Pearl Beige
Latte
Mocca
Antracit
Bordeaux
Ferrari
Azzurro

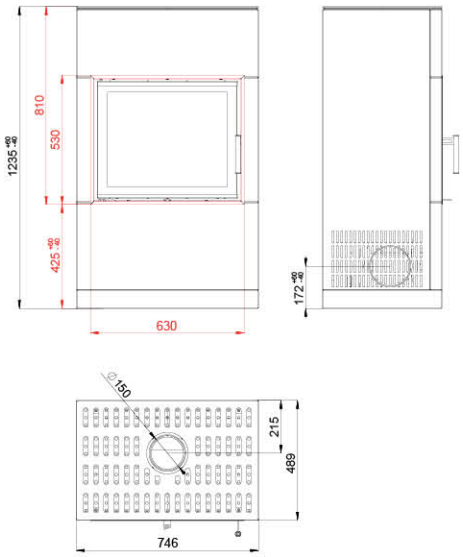

4 - 7 kW | 82 % | 150 mm | 400 mm | 435 x 295 mm | 570 x 468 mm

12 Pa | 1,85 kg/h | 262 °C | 4,6 g/s | 0,0873 % | 19 mg/Nm³ | 217 kg

BEF **KOMPAKT THERM 6 CL/CP PASSIVE**

White
Pearl Beige
Latte
Mocca
Antracit
Bordeaux
Ferrari
Azzurro

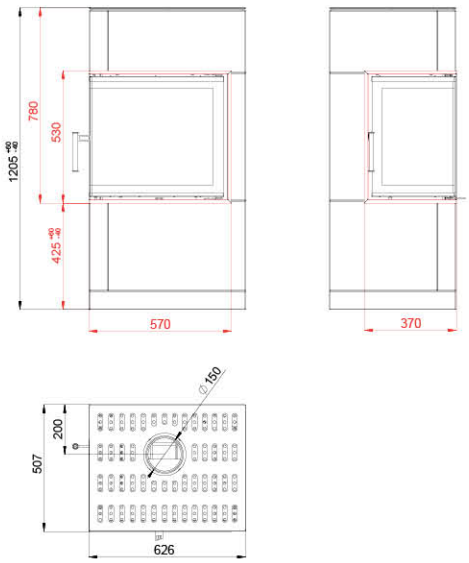

4 - 7 kW | 82 % | 150 mm | 330 mm | 395 x 295 mm | 530 x 330 x 468 mm

12 Pa | 1,85 kg/h | 262 °C | 4,6 g/s | 0,0873 % | 19 mg/Nm³ | 189 kg

BEF **KOMPAKT THERM 7 PASSIVE**

White
Pearl Beige
Latte
Mocca
Antracit
Bordeaux
Ferrari
Azzurro

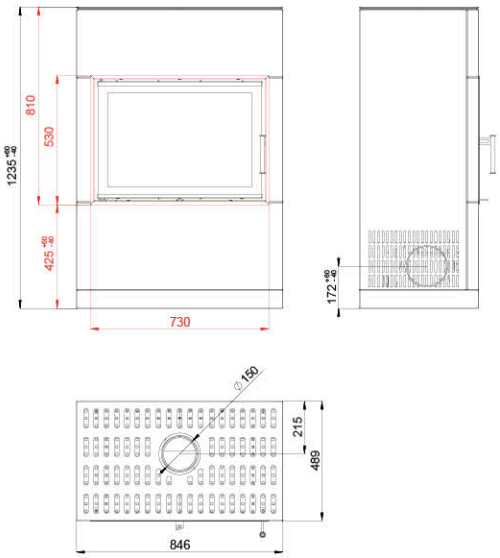

5 - 8 kW | 82 % | 150 mm | 500 mm | 520 x 295 mm | 2x 670 x 468 mm

12 Pa | 2,05 kg/h | 264 °C | 5,6 g/s | 0,0868 % | 19 mg/Nm³ | 239 kg

BEF **KOMPAKT THERM 7 CL/CP PASSIVE**

White
Pearl Beige
Latte
Mocca
Antracit
Bordeaux
Ferrari
Azzurro

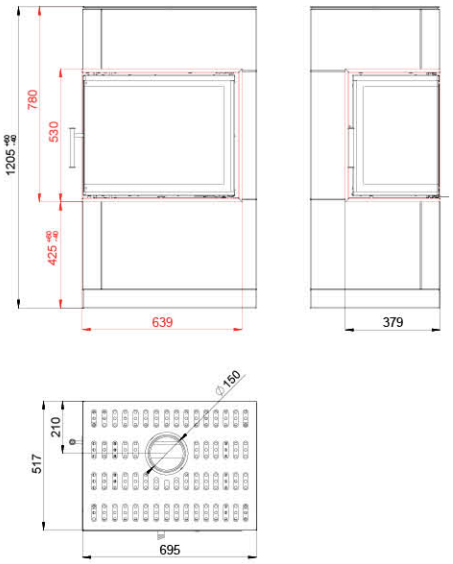

5 - 8 kW | 82 % | 150 mm | 400 mm | 465 x 295 mm | 2x 600 x 340 x 468 mm

12 Pa | 2,05 kg/h | 264 °C | 5,6 g/s | 0,0868 % | 19 mg/Nm³ | 214 kg

BEF **KOMPAKT THERM 8 PASSIVE**

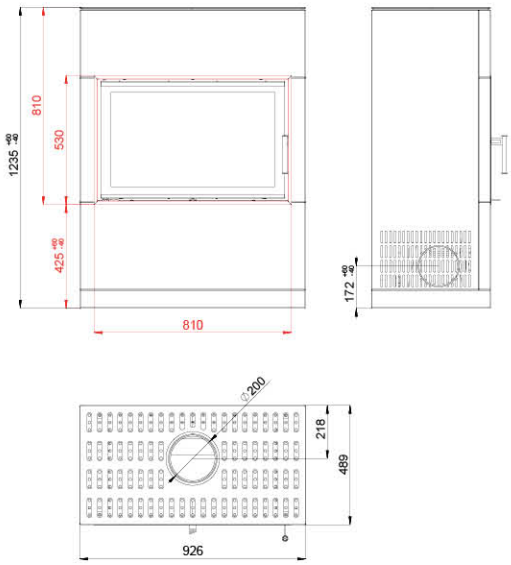

White
Pearl Beige
Latte
Mocca
Antracit
Bordeaux
Ferrari
Azzurro

7 - 10 kW | 84 % | 200 mm | 500 mm | 600 x 295 mm | 750 x 468 mm

12 Pa | 2,7 kg/h | 257 °C | 6 g/s | 0,0868 % | 18 mg/Nm³ | 256 kg

BEF **KOMPAKT THERM 8 CL/CP PASSIVE**

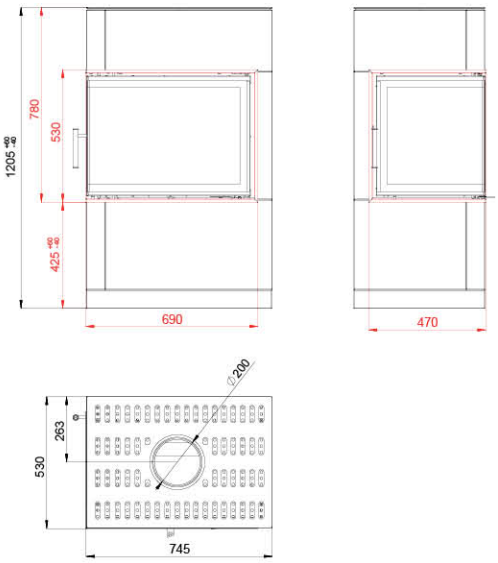

White
Pearl Beige
Latte
Mocca
Antracit
Bordeaux
Ferrari
Azzurro

7 - 10 kW | 84 % | 200 mm | 500 mm | 515 x 295 mm | 650 x 430 x 468 mm

12 Pa | 2,7 kg/h | 257 °C | 6 g/s | 0,0868 % | 18 mg/Nm³ | 226 kg

BEF **RUSTICAL**

16:9

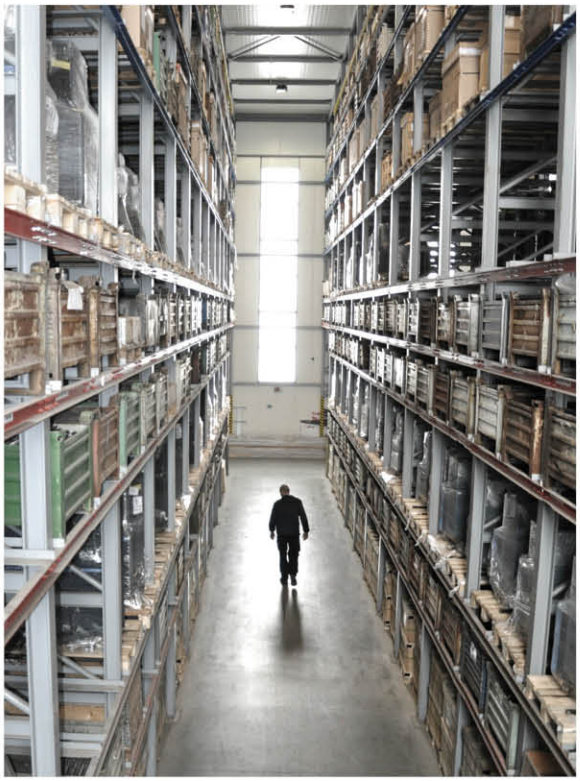

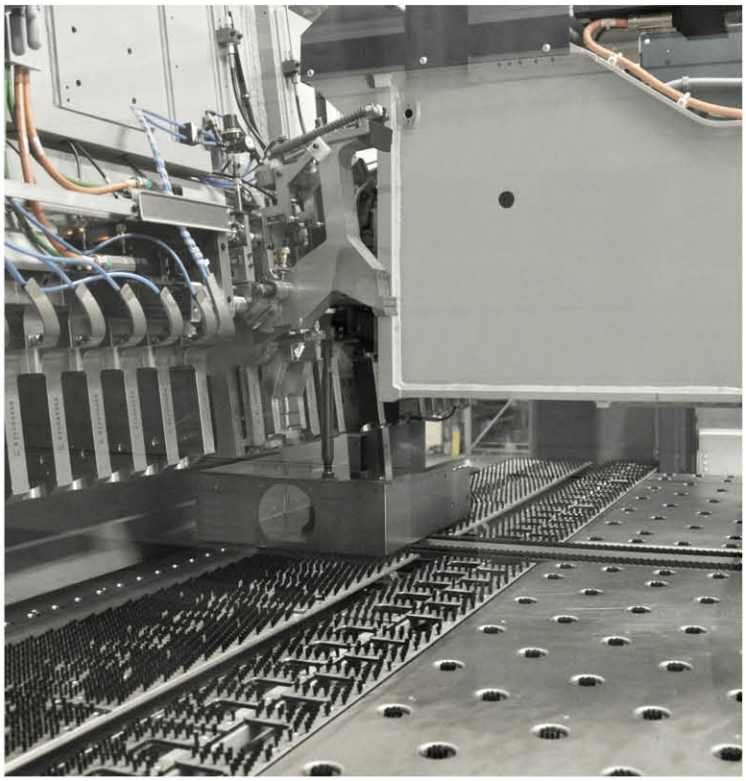

* These data are informative, the manufacturer reserves the right to change.

BEF HOME

fire for your heart

CATALOGUE OF HOT AIR FIREPLACE INSERTS

BEF HOME
fire for your heart

CZ | Kotvrdovice 277
679 07 Kotvrdovice
Czech Republic

tel.: +420 516 428 240
e-mail: info@bef.cz
IČ: 25 52 46 82
DIČ: CZ 25 52 46 82

SK | Turá Lúka 97
907 03 Myjava
Slovakia

tel.: +421 346 216 790
e-mail: info@bef.sk

PL | Bąków ul. Główna 4a
43-246 Strumień
Poland

tel.: +48 530 712 534
tel.: +48 530 712 624
e-mail: info@befpolska.pl

FR | 1 Place de l'Homme de Fer
67 000 Strasbourg
France

tél.: 00 33 672 383 113
e-mail: info@foyers-bef.fr

BEF **ROYAL V 6 C**

BImSchV
Stufe 2

15a
B - VG

ČSN EN
13229

eco design

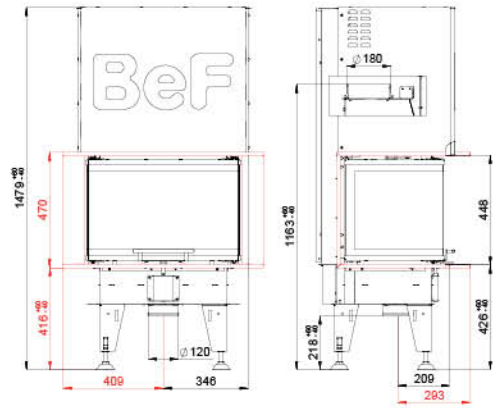

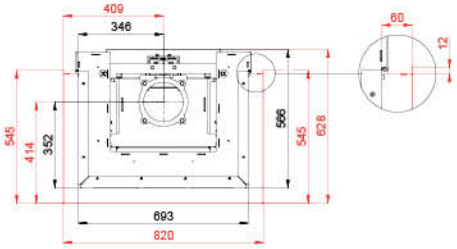

4 - 7 kW	82 %	180 mm	330 mm	400 x 251 mm	624 x 400 x 400 mm

12 Pa	1,85 kg/h	262 °C	4,6 g/s	0,0873 %	19 mg/Nm³	232 kg

BEF **ROYAL V 6 U**

BImSchV
Stufe 2

15a
B - VG

ČSN EN
13229

eco design

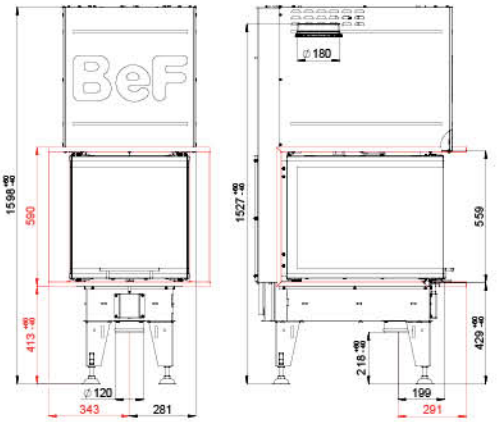

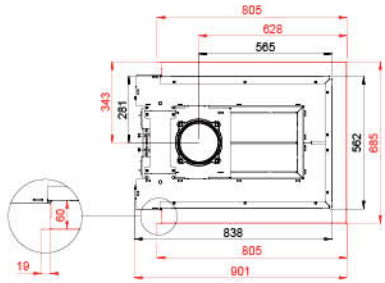

4 - 7 kW	82 %	180 mm	400 mm	282 x 491 mm	500 x 660 x 510 mm

12 Pa	1,85 kg/h	262 °C	4,6 g/s	0,0873 %	19 mg/Nm³	327 kg

BEF **ROYAL 7**

BImSchV
Stufe 2

15a
B - VG

ČSN EN
13229

eco design

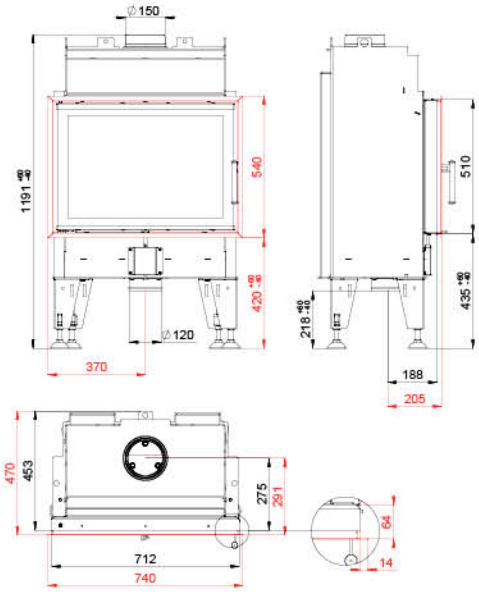

5 - 8 kW | 82 % | 150 mm | 400 mm | 520 x 295 mm | 670 x 468 mm

12 Pa | 2,05 kg/h | 264 °C | 5,6 g/s | 0,0868 % | 19 mg/Nm³ | 174 kg

BEF **ROYAL 7 CL/CP**

BImSchV
Stufe 2

15a
B - VG

ČSN EN
13229

eco design

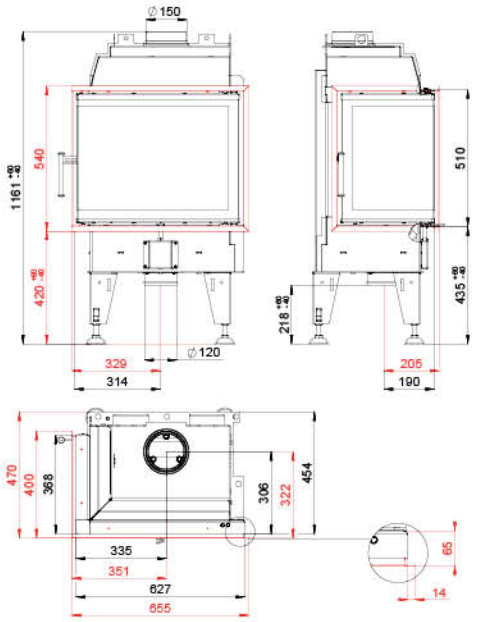

5 - 8 kW | 82 % | 150 mm | 330 mm | 465 x 295 mm | 600 x 340 x 468 mm

12 Pa | 2,05 kg/h | 264 °C | 5,6 g/s | 0,0868 % | 19 mg/Nm³ | 146 kg

BEF **ROYAL V 7**

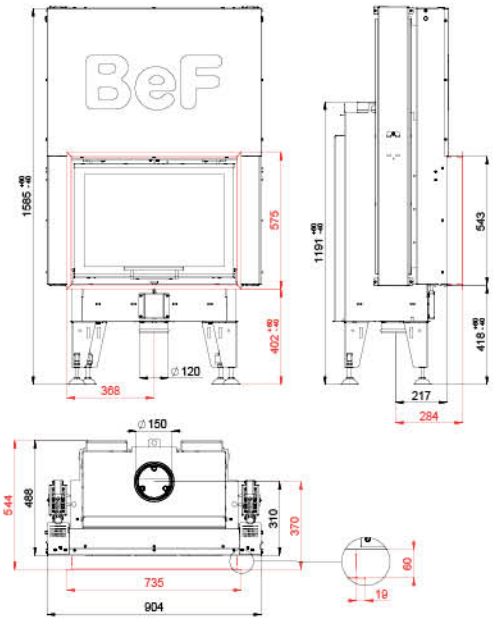

BImSchV Stufe 2

15a B - VG

ČSN EN 13229

eco design

5 - 8 kW | 82 % | 150 mm | 400 mm | 520 x 295 mm | 670 x 468 mm

12 Pa | 2,05 kg/h | 264 °C | 5,6 g/s | 0,0868 % | 19 mg/Nm³ | 251 kg

BEF **ROYAL V 7 CL/CP**

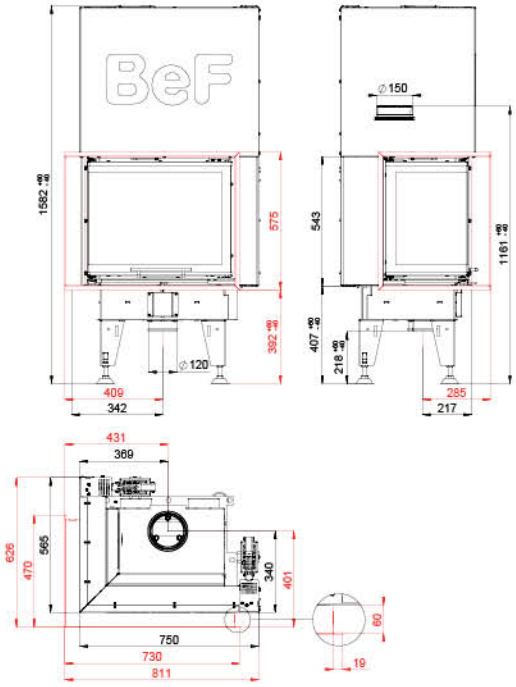

BImSchV Stufe 2

15a B - VG

ČSN EN 13229

eco design

5 - 8 kW | 82 % | 150 mm | 330 mm | 465 x 295 mm | 600 x 340 x 468 mm

12 Pa | 2,05 kg/h | 264 °C | 5,6 g/s | 0,0868 % | 19 mg/Nm³ | 247 kg

BEF **ROYAL 8**

BImSchV
Stufe 2

15a
B - VG

ČSN EN
13229

eco design

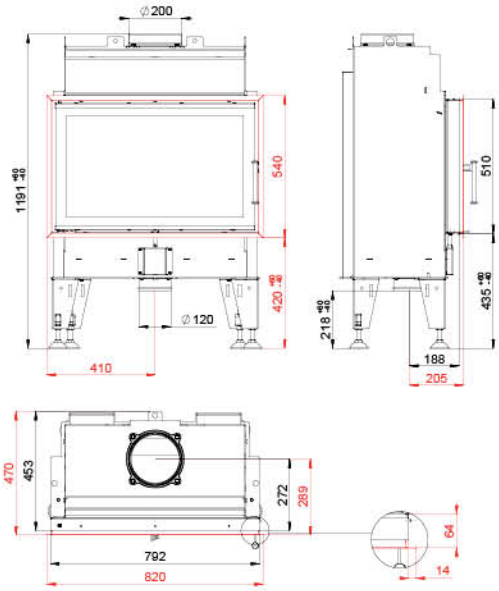

7 - 10 kW | 84 % | 200 mm | 500 mm | 600 x 295 mm | 750 x 468 mm

12 Pa | 2,7 kg/h | 257 °C | 6 g/s | 0,0868 % | 18 mg/Nm³ | 189 kg

BEF **ROYAL 8 CL/CP**

BImSchV
Stufe 2

15a
B - VG

ČSN EN
13229

eco design

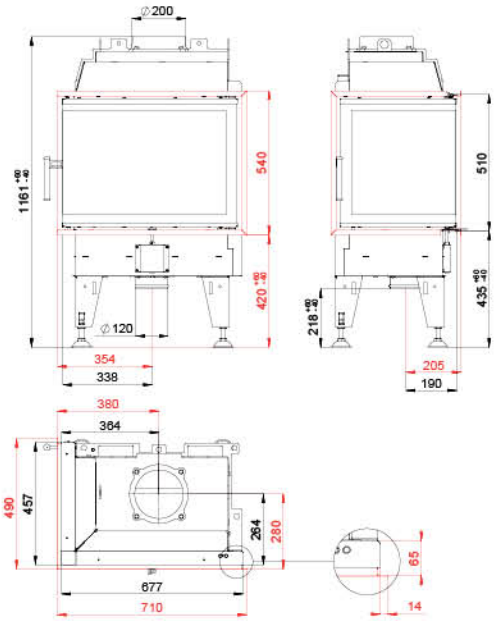

7 - 10 kW | 84 % | 200 mm | 400 mm | 515 x 295 mm | 650 x 430 x 468 mm

12 Pa | 2,7 kg/h | 257 °C | 6 g/s | 0,0868 % | 18 mg/Nm³ | 157 kg

BEF **ROYAL V 8**

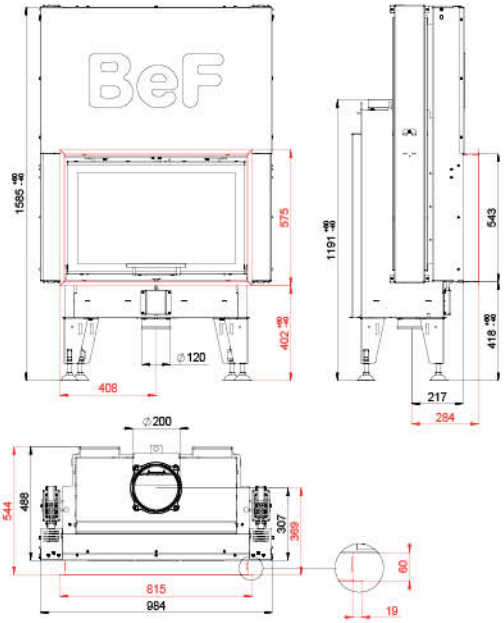

BImSchV Stufe 2

15a B - VG

ČSN EN 13229

eco design

7 - 10 kW | 84 % | 200 mm | 500 mm | 600 x 295 mm | 750 x 468 mm

12 Pa | 2,7 kg/h | 257 °C | 6 g/s | 0,0868 % | 18 mg/Nm³ | 268 kg

BEF **ROYAL V 8 CL/CP**

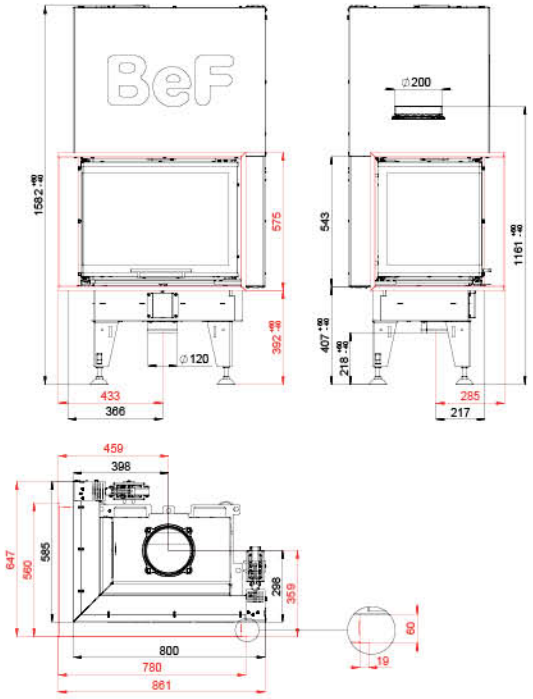

BImSchV Stufe 2

15a B - VG

ČSN EN 13229

eco design

7 - 10 kW | 84 % | 200 mm | 400 mm | 515 x 295 mm | 650 x 430 x 468 mm

12 Pa | 2,7 kg/h | 257 °C | 6 g/s | 0,0868 % | 18 mg/Nm³ | 250 kg

BEF **ROYAL V 8 C**

BImSchV
Stufe 2

15a
B - VG

ČSN EN
13229

eco design

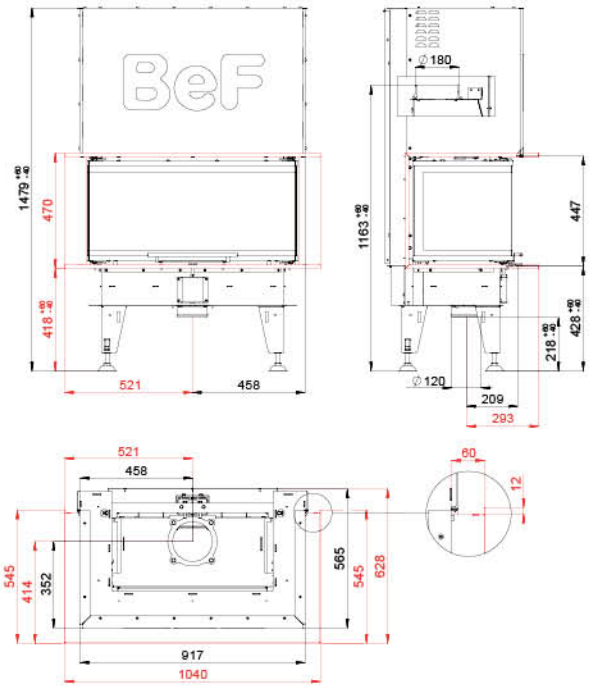

7 - 10 kW | 84 % | 180 mm | 500 mm | 621 x 251 mm | 848 x 400 x 400 mm

12 Pa | 2,7 kg/h | 257 °C | 6 g/s | 0,0868 % | 18 mg/Nm³ | 265 kg

BEF **ROYAL V 8 U**

BImSchV
Stufe 2

15a
B - VG

ČSN EN
13229

eco design

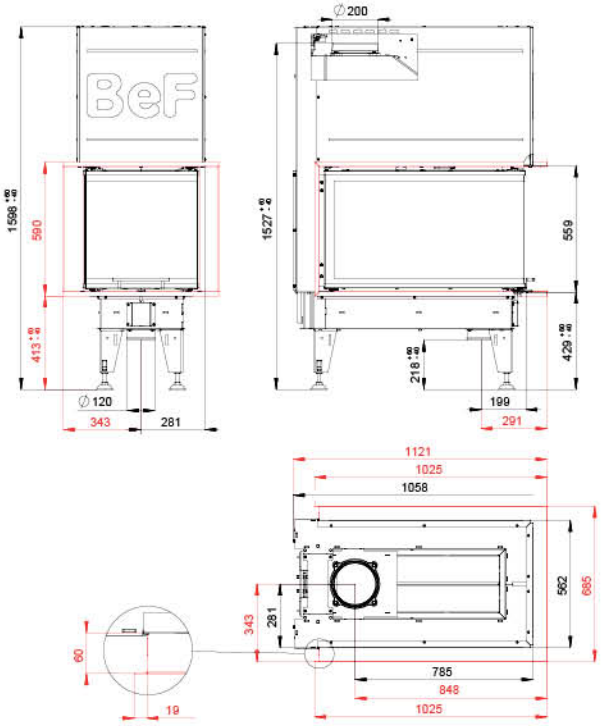

7 - 10 kW | 84 % | 200 mm | 660 mm | 282 x 711 mm | 500 x 880 x 510 mm

12 Pa | 2,7 kg/h | 257 °C | 6 g/s | 0,0868 % | 18 mg/Nm³ | 381 kg

BEF **ROYAL V 10 C**

BImSchV
Stufe 2

15a
B - VG

ČSN EN
13229

eco design

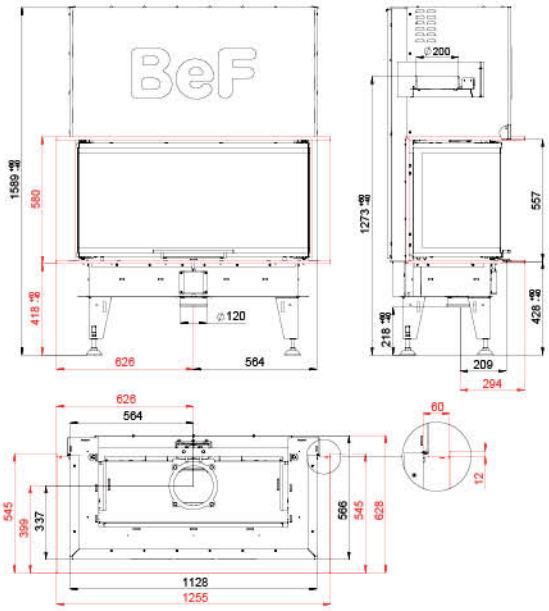

11 - 14 kW | 84 % | 200 mm | 660 mm | 836 x 251 mm | 1060 x 400 x 510 mm

12 Pa | 3,6 kg/h | 235 °C | 10,2 g/s | 0,0877 % | 11 mg/Nm³ | 337 kg

BEF **ROYAL V 10 U**

BImSchV
Stufe 2

15a
B - VG

ČSN EN
13229

eco design

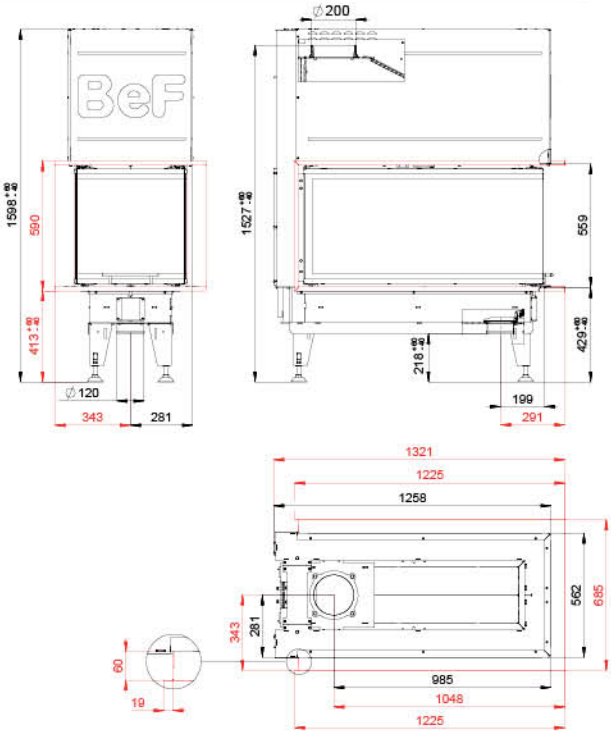

11 - 14 kW | 84 % | 200 mm | 800 mm | 265 x 911 mm | 500 x 1080 x 510 mm

12 Pa | 3,6 kg/h | 235 °C | 10,2 g/s | 0,0877 % | 11 mg/Nm³ | 453 kg

BEF **THERM 6**

BImSchV
Stufe 2

15a
B - VG

ČSN EN
13229

eco design

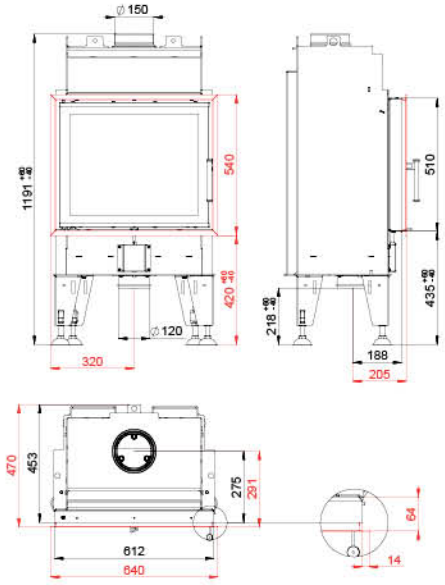

4 - 7 kW | 82 % | 150 mm | 250 mm | 435 x 295 mm | 570 x 468 mm

12 Pa | 1,85 kg/h | 262 °C | 4,6 g/s | 0,0873 % | 19 mg/Nm³ | 147 kg

BEF **THERM 6 CL/CP**

BImSchV
Stufe 2

15a
B - VG

ČSN EN
13229

eco design

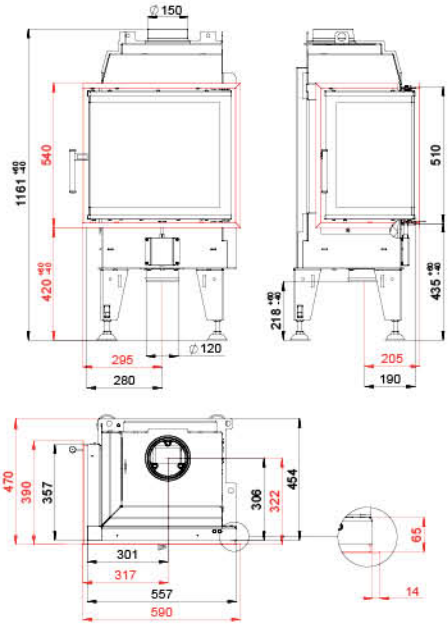

4 - 7 kW | 82 % | 150 mm | 250 mm | 395 x 295 mm | 530 x 330 x 468 mm

12 Pa | 1,85 kg/h | 262 °C | 4,6 g/s | 0,0873 % | 19 mg/Nm³ | 126 kg

BEF **THERM V 6**

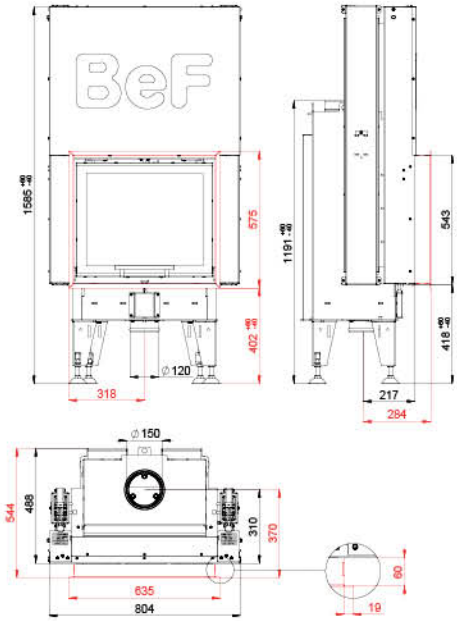

BImSchV Stufe 2

15a B - VG

ČSN EN 13229

eco design

4 - 7 kW | 82 % | 150 mm | 250 mm | 435 x 295 mm | 570 x 468 mm

12 Pa | 1,85 kg/h | 262 °C | 4,6 g/s | 0,0873 % | 19 mg/Nm³ | 227 kg

BEF **THERM V 6 CL/CP**

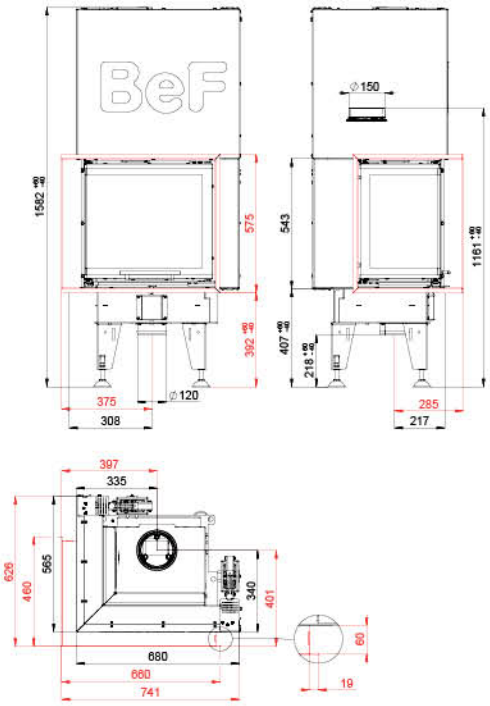

BImSchV Stufe 2

15a B - VG

ČSN EN 13229

eco design

4 - 7 kW | 82 % | 150 mm | 250 mm | 395 x 295 mm | 530 x 330 x 468 mm

12 Pa | 1,85 kg/h | 262 °C | 4,6 g/s | 0,0873 % | 19 mg/Nm³ | 236 kg

BEF **THERM 6 C**

BImSchV
Stufe 2

15a
B - VG

ČSN EN
13229

eco design

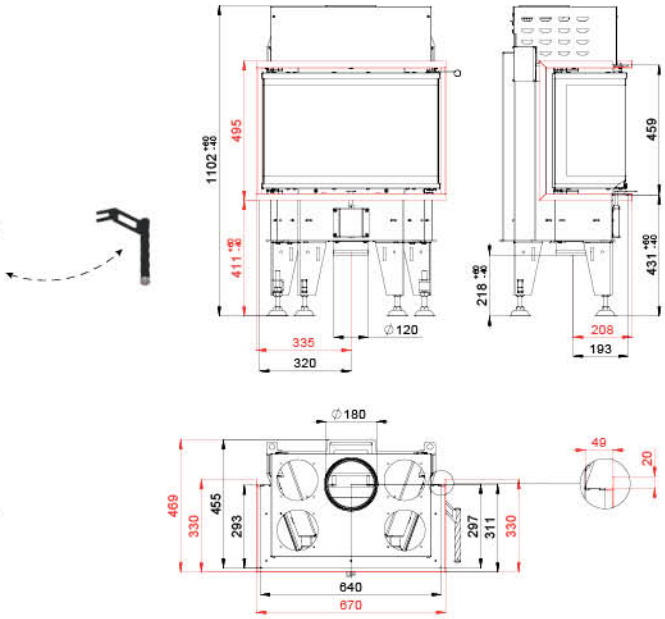

4 - 7 kW | 82 % | 180 mm | 250 mm | 465 x 295 mm | 624 x 250 x 400 mm

12 Pa | 1,85 kg/h | 262 °C | 4,6 g/s | 0,0873 % | 19 mg/Nm³ | 130 kg

BEF **THERM V 6 C**

BImSchV
Stufe 2

15a
B - VG

ČSN EN
13229

eco design

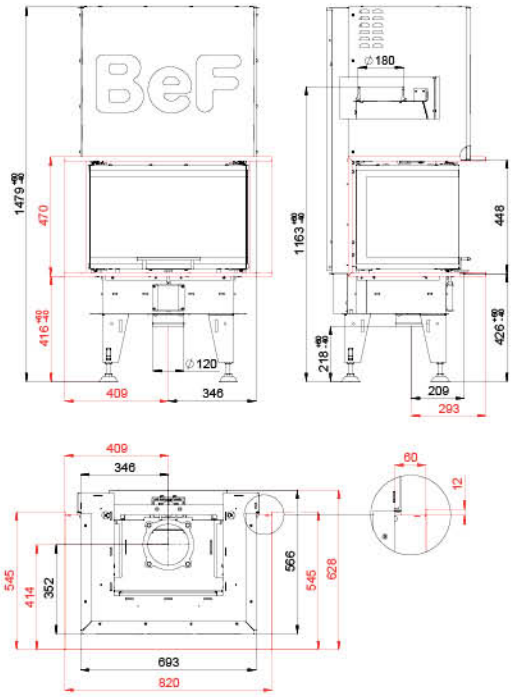

4 - 7 kW | 82 % | 180 mm | 330 mm | 400 x 251 mm | 624 x 400 x 400 mm

12 Pa | 1,85 kg/h | 262 °C | 4,6 g/s | 0,0873 % | 19 mg/Nm³ | 227 kg

BEF **THERM V 6 U**

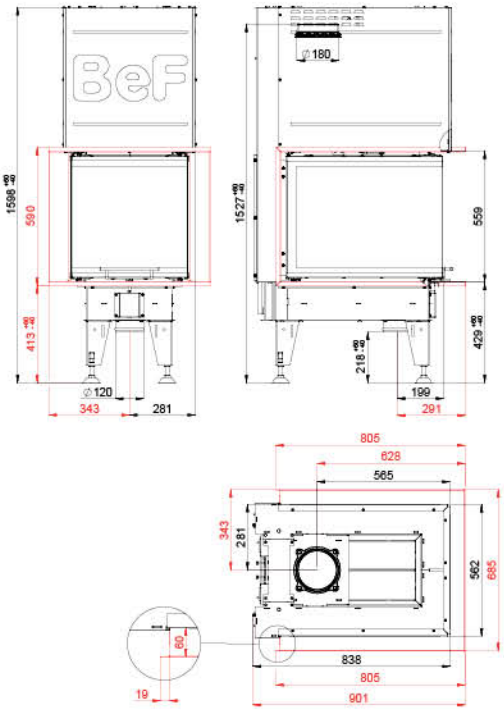

BImSchV
Stufe 2

15a
B - VG

ČSN EN
13229

eco design

4 - 7 kW | 82 % | 180 mm | 400 mm | 282 x 491 mm | 500 x 660 x 510 mm

12 Pa | 1,85 kg/h | 262 °C | 4,6 g/s | 0,0873 % | 19 mg/Nm³ | 322 kg

BEF **THERM 7**

BImSchV
Stufe 2

15a
B - VG

ČSN EN
13229

eco design

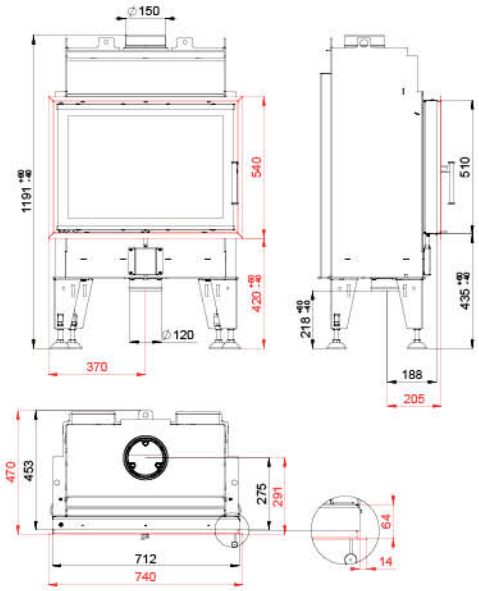

5 - 8 kW	82 %	150 mm	400 mm	520 x 295 mm	670 x 468 mm

12 Pa	2,05 kg/h	264 °C	5,6 g/s	0,0868 %	19 mg/Nm³	169 kg

BEF **THERM 7 CL/CP**

BImSchV
Stufe 2

15a
B - VG

ČSN EN
13229

eco design

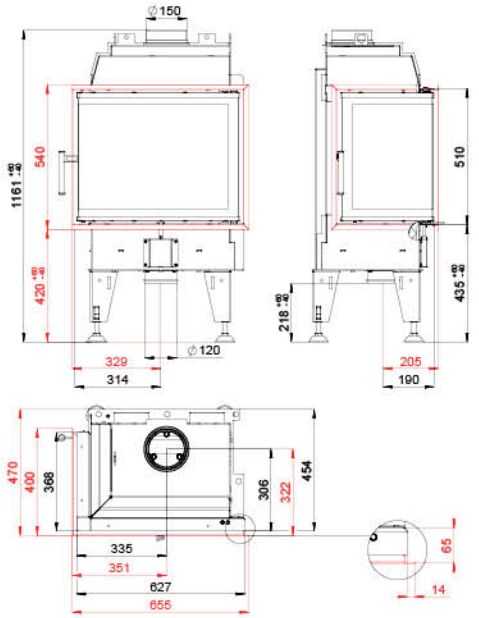

5 - 8 kW	82 %	150 mm	330 mm	465 x 295 mm	600 x 340 x 468 mm

12 Pa	2,05 kg/h	264 °C	5,6 g/s	0,0868 %	19 mg/Nm³	141 kg

BEF **THERM V 7**

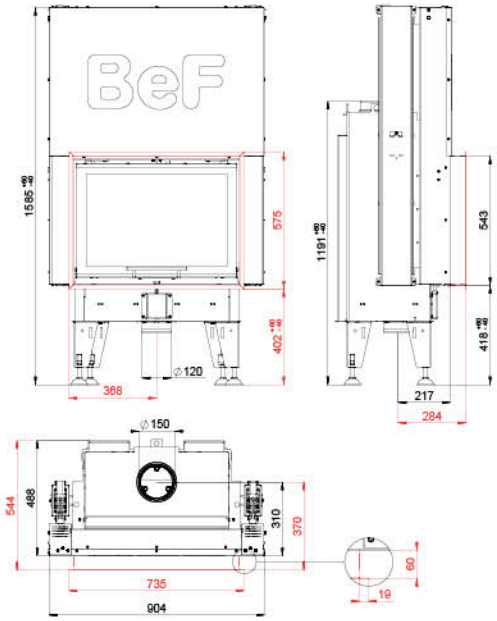

BImSchV Stufe 2

15a B - VG

ČSN EN 13229

eco design

5 - 8 kW | 82 % | 150 mm | 400 mm | 520 x 295 mm | 1x 670 x 468 mm

12 Pa | 2,05 kg/h | 264 °C | 5,6 g/s | 0,0868 % | 19 mg/Nm³ | 246 kg

BEF **THERM V 7 CL/CP**

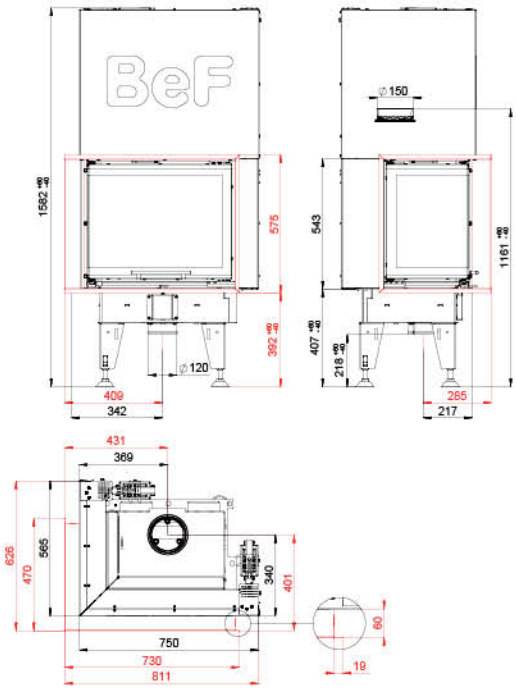

BImSchV Stufe 2

15a B - VG

ČSN EN 13229

eco design

5 - 8 kW | 82 % | 150 mm | 330 mm | 465 x 295 mm | 1x 600 x 340 x 468 mm

12 Pa | 2,05 kg/h | 264 °C | 5,6 g/s | 0,0868 % | 19 mg/Nm³ | 242 kg

BEF **THERM 8**

BImSchV
Stufe 2

15a
B - VG

ČSN EN
13229

eco design

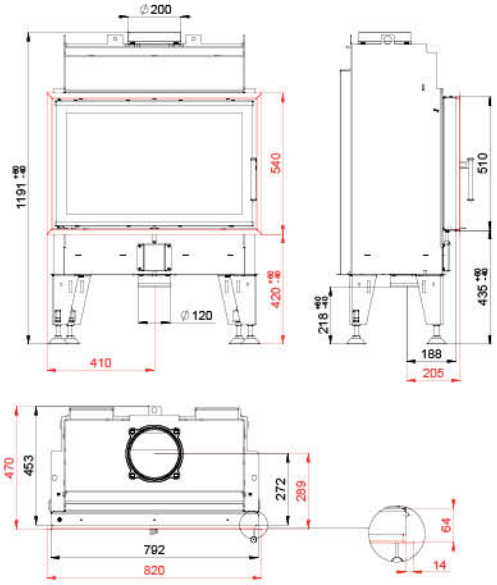

7 - 10 kW | 84 % | 200 mm | 500 mm | 600 x 295 mm | 750 x 468 mm

12 Pa | 2,7 kg/h | 257 °C | 6 g/s | 0,0868 % | 18 mg/Nm³ | 184 kg

BEF **THERM 8 CL/CP**

BImSchV
Stufe 2

15a
B - VG

ČSN EN
13229

eco design

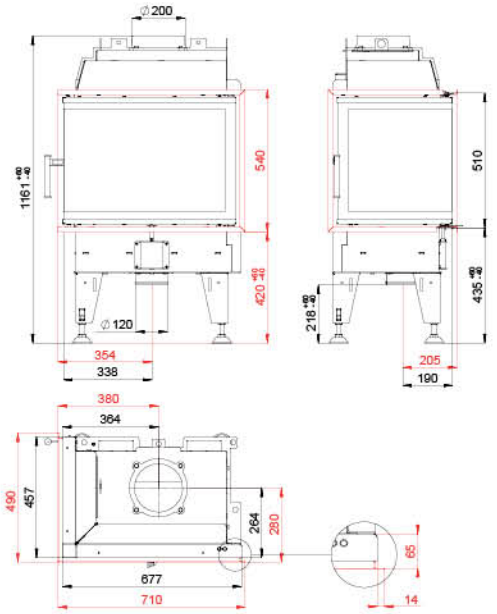

7 - 10 kW | 84 % | 200 mm | 400 mm | 515 x 295 mm | 650 x 430 x 468 mm

12 Pa | 2,7 kg/h | 257 °C | 6 g/s | 0,0868 % | 18 mg/Nm³ | 152 kg

BEF **THERM V 8**

BImSchV
Stufe 2

15a
B - VG

ČSN EN
13229

eco design

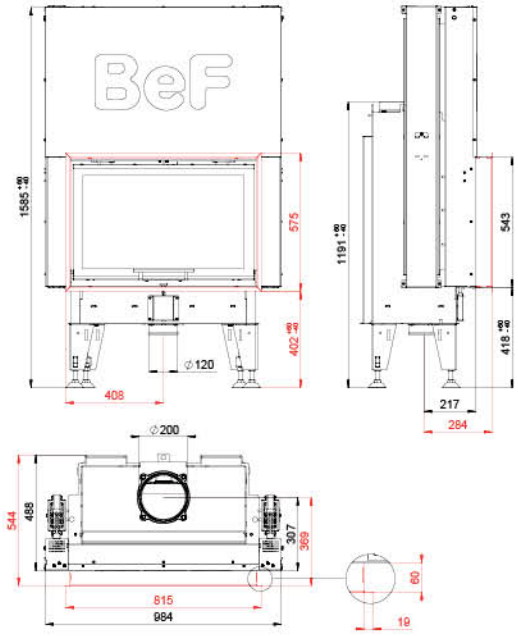

7 - 10 kW | 84 % | 200 mm | 500 mm | 600 x 295 mm | 750 x 468 mm

12 Pa | 2,7 kg/h | 257 °C | 6 g/s | 0,0868 % | 18 mg/Nm³ | 263 kg

BEF **THERM V 8 CL/CP**

BImSchV
Stufe 2

15a
B - VG

ČSN EN
13229

eco design

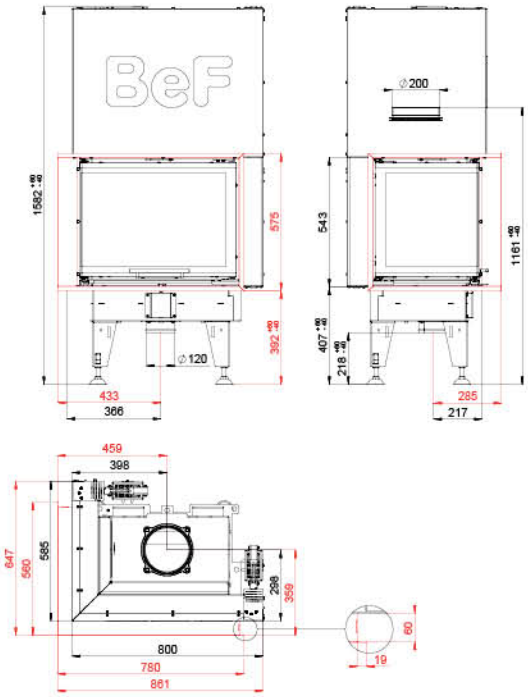

7 - 10 kW | 84 % | 200 mm | 400 mm | 515 x 295 mm | 650 x 430 x 468 mm

12 Pa | 2,7 kg/h | 257 °C | 6 g/s | 0,0868 % | 18 mg/Nm³ | 245 kg

BEF **THERM V 8 C**

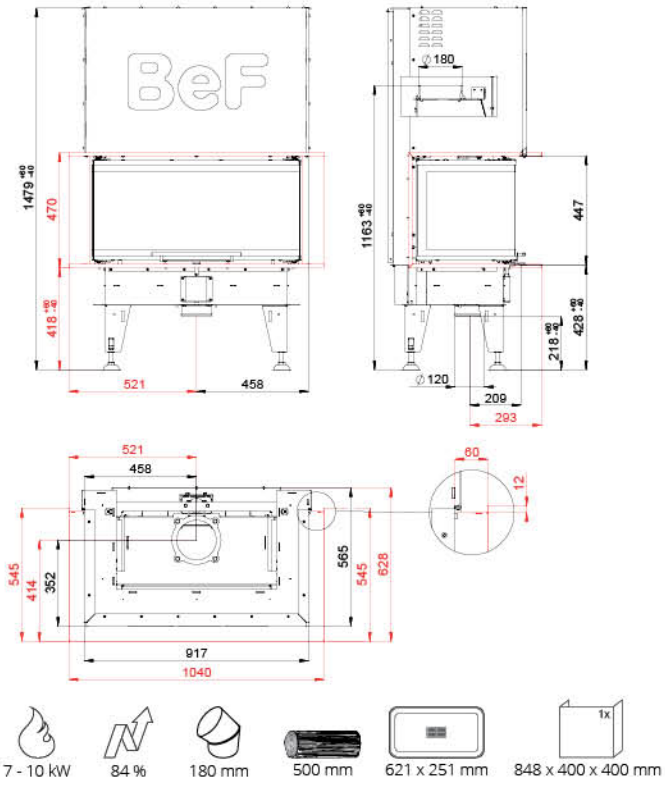

BImSchV Stufe 2

15a B - VG

ČSN EN 13229

eco design

7 - 10 kW | 84 % | 180 mm | 500 mm | 621 x 251 mm | 848 x 400 x 400 mm

12 Pa | 2,7 kg/h | 257 °C | 6 g/s | 0,0868 % | 18 mg/Nm³ | 260 kg

BEF **THERM V 8 U**

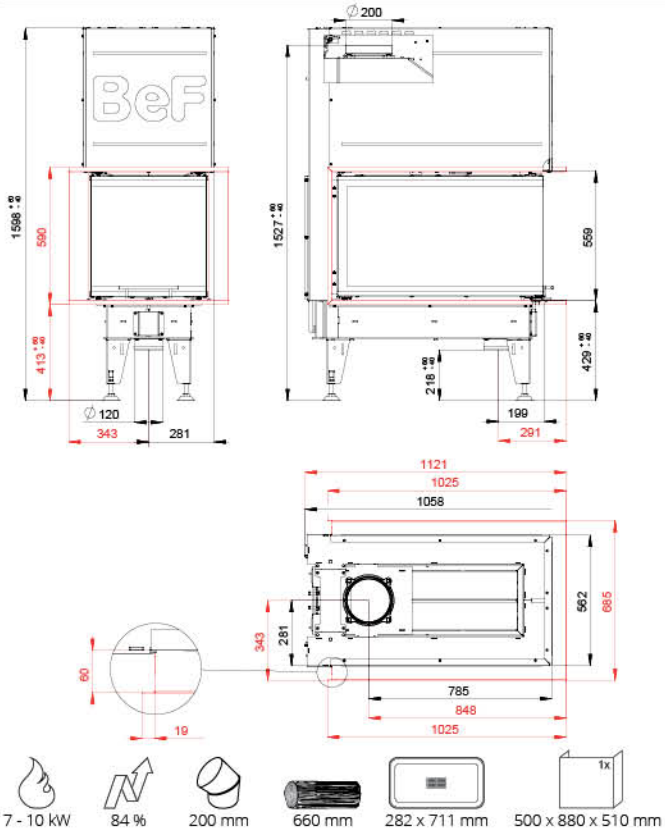

BImSchV Stufe 2

15a B - VG

ČSN EN 13229

eco design

7 - 10 kW | 84 % | 200 mm | 660 mm | 282 x 711 mm | 500 x 880 x 510 mm

12 Pa | 2,7 kg/h | 257 °C | 6 g/s | 0,0868 % | 18 mg/Nm³ | 376 kg

BEF **THERM 10**

BImSchV
Stufe 2

15a
B - VG

ČSN EN
13229

eco design

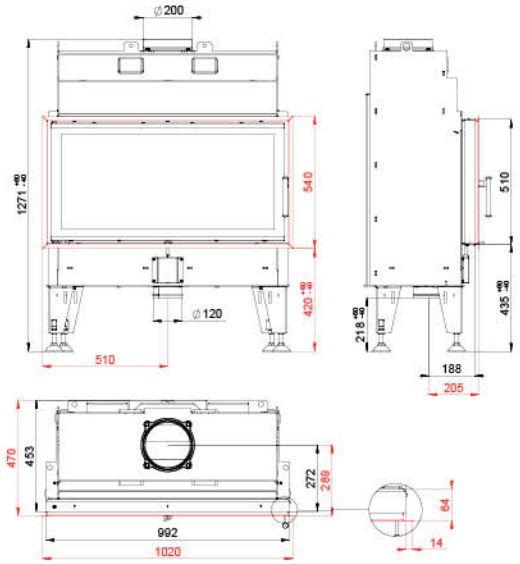

11 - 14 kW | 84 % | 200 mm | 660 mm | 800 x 295 mm | 950 x 468 mm

12 Pa | 3,6 kg/h | 235 °C | 10,2 g/s | 0,0877 % | 11 mg/Nm³ | 243 kg

BEF **THERM V 10**

BImSchV
Stufe 2

15a
B - VG

ČSN EN
13229

eco design

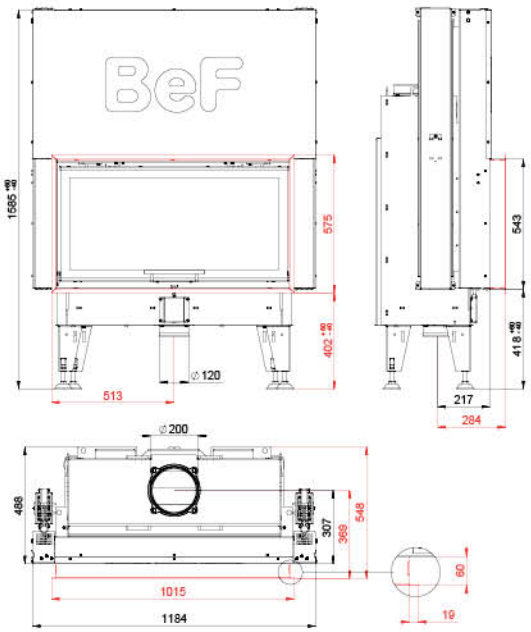

11 - 14 kW | 84 % | 200 mm | 660 mm | 800 x 295 mm | 950 x 468 mm

12 Pa | 3,6 kg/h | 235 °C | 10,2 g/s | 0,0877 % | 11 mg/Nm³ | 337 kg

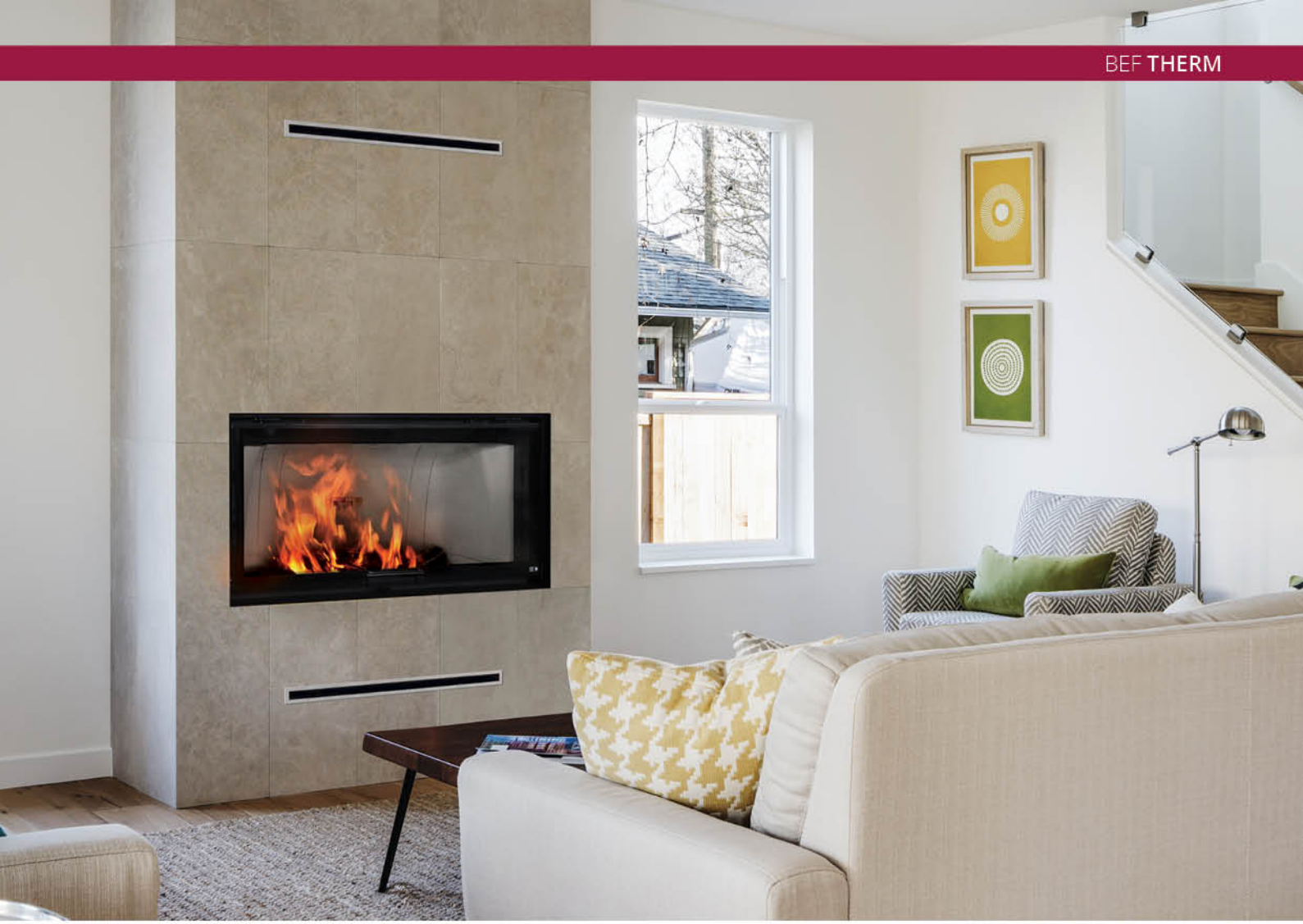

BEF **THERM V 10 CL/CP**

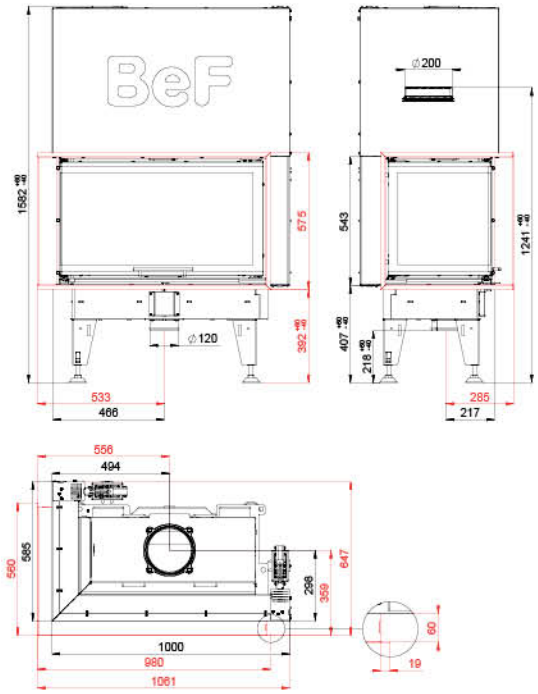

BImSchV Stufe 2

15a B - VG

ČSN EN 13229

eco design

11 - 14 kW | 84 % | 200 mm | 660 mm | 715 x 295 mm | 850 x 430 x 468 mm

12 Pa | 3,6 kg/h | 235 °C | 10,2 g/s | 0,0877 % | 11 mg/Nm³ | 287 kg

BEF **THERM V 10 C**

BImSchV
Stufe 2

15a
B - VG

ČSN EN
13229

eco design

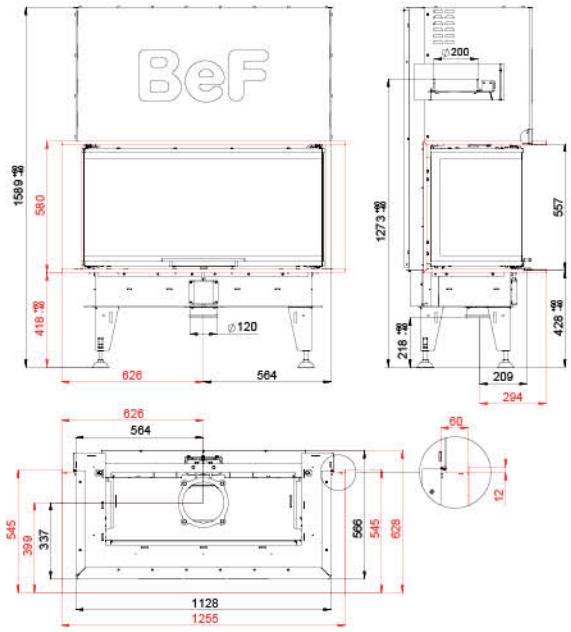

11 - 14 kW	84 %	200 mm	660 mm	836 x 251 mm	1060 x 400 x 510 mm

12 Pa	3,6 kg/h	235 °C	10,2 g/s	0,0877 %	11 mg/Nm³	332 kg

BEF **THERM V 10 U**

BImSchV
Stufe 2

15a
B - VG

ČSN EN
13229

eco design

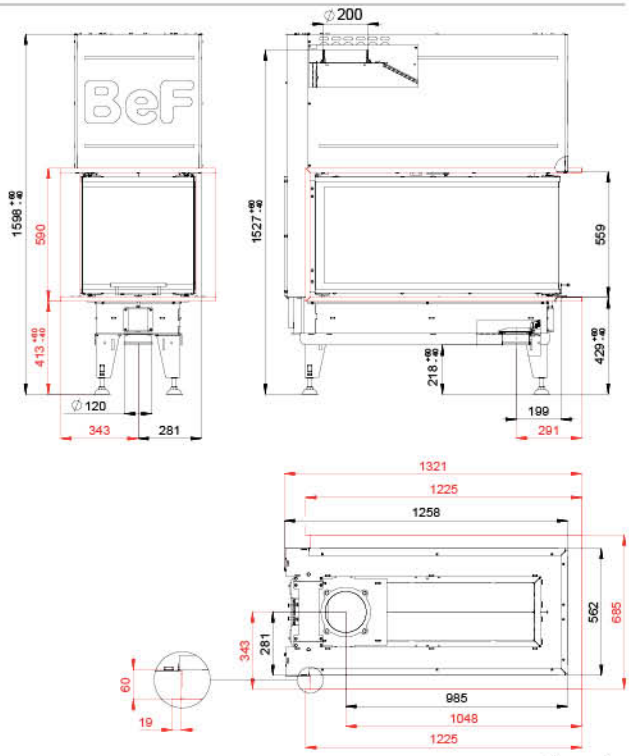

11 - 14 kW	84 %	200 mm	800 mm	265 x 911 mm	500 x 1080 x 510 mm

12 Pa	3,6 kg/h	235 °C	10,2 g/s	0,0877 %	11 mg/Nm³	448 kg

BEF **THERM V 12**

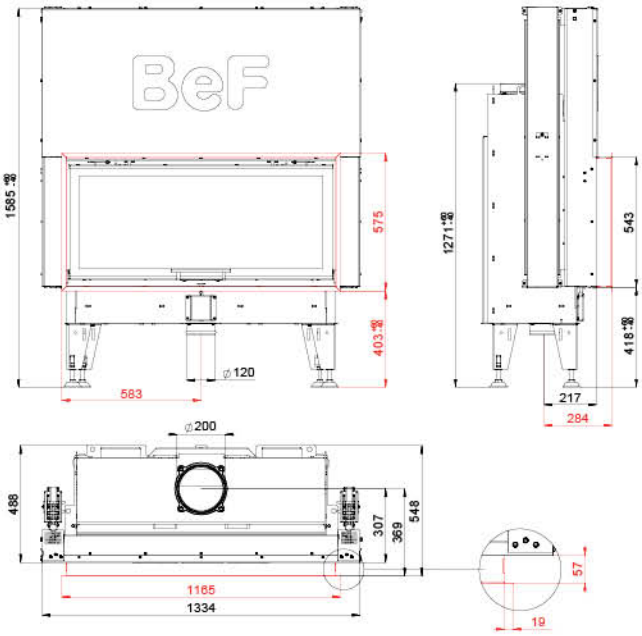

BImSchV Stufe 2

15a B - VG

ČSN EN 13229

eco design

11,5 - 14,5 kW | 80 % | 200 mm | 800 mm | 954 x 298 mm | 1x 1100 x 468 mm

10 Pa | 4 kg/h | 256 °C | 12 g/s | 0,0898 % | 30 mg/Nm³ | 354 kg

BEF **THERM V 14**

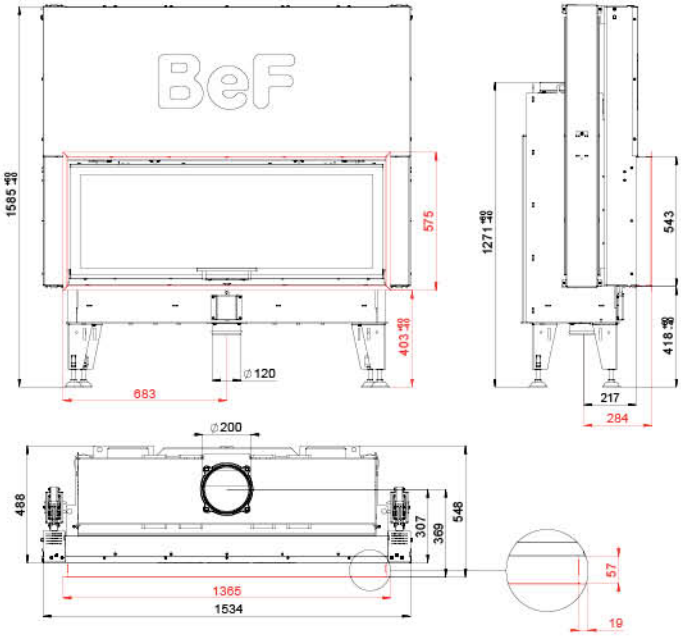

BImSchV Stufe 2

15a B - VG

ČSN EN 13229

eco design

12 - 15 kW | 82 % | 200 mm | 1000 mm | 1154 x 298 mm | 1x 1300 x 468 mm

10 Pa | 4 kg/h | 262 °C | 10,3 g/s | 0,0985 % | 26 mg/Nm³ | 406 kg

BEF **FEEL 6**

BImSchV
Stufe 2

15a
B - VG

ČSN EN
13229

eco design

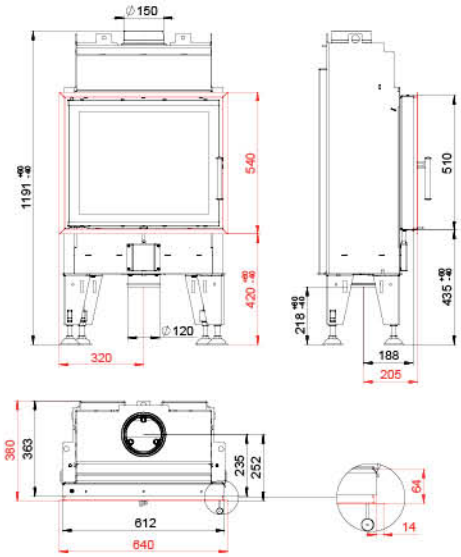

3 - 6 kW | 84 % | 150 mm | 250 mm | 435 x 220 mm | 570 x 468 mm

12 Pa | 1,53 kg/h | 206 °C | 4,3 g/s | 0,0946 % | 17 mg/Nm³ | 126 kg

BEF **FEEL 6 CL/CP**

BImSchV
Stufe 2

15a
B - VG

ČSN EN
13229

eco design

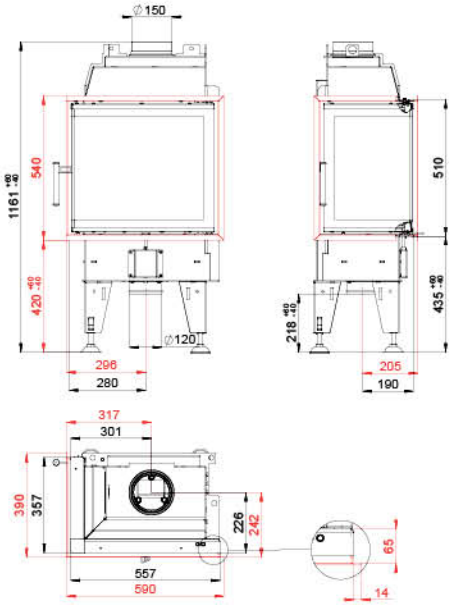

3 - 6 kW | 84 % | 150 mm | 250 mm | 395 x 215 mm | 530 x 330 x 468 mm

12 Pa | 1,53 kg/h | 206 °C | 4,3 g/s | 0,0946 % | 17 mg/Nm³ | 114 kg

BEF **FEEL V 6**

BImSchV
Stufe 2

15a
B - VG

ČSN EN
13229

eco design

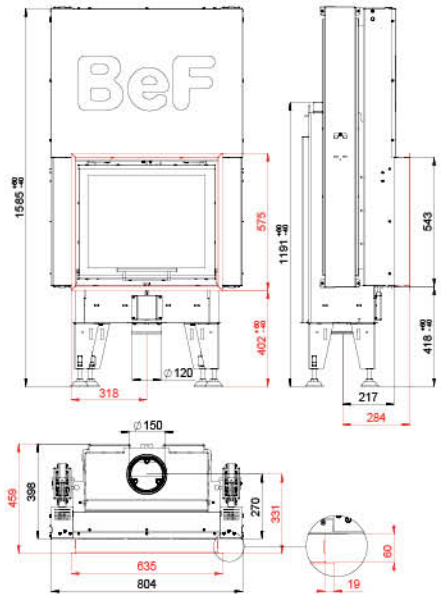

3 - 6 kW | 84 % | 150 mm | 250 mm | 435 x 220 mm | 570 x 468 mm

12 Pa | 1,53 kg/h | 206 °C | 4,3 g/s | 0,0946 % | 17 mg/Nm³ | 199 kg

BEF **FEEL V 6 CL/CP**

BImSchV
Stufe 2

15a
B - VG

ČSN EN
13229

eco design

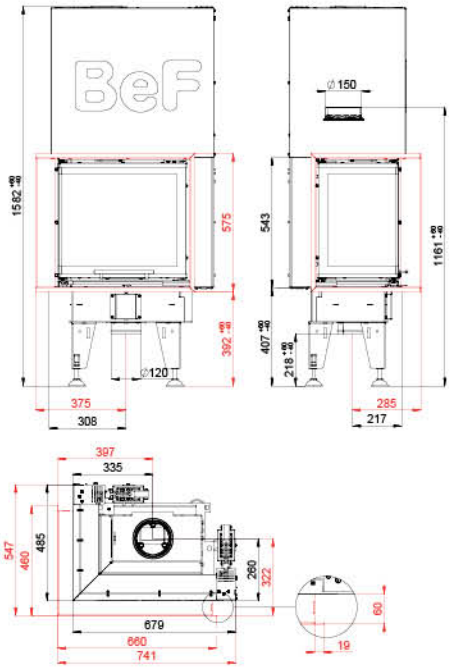

3 - 6 kW | 84 % | 150 mm | 250 mm | 395 x 215 mm | 530 x 330 x 468 mm

12 Pa | 1,53 kg/h | 206 °C | 4,3 g/s | 0,0946 % | 17 mg/Nm³ | 203 kg

BEF **FEEL 6 C**

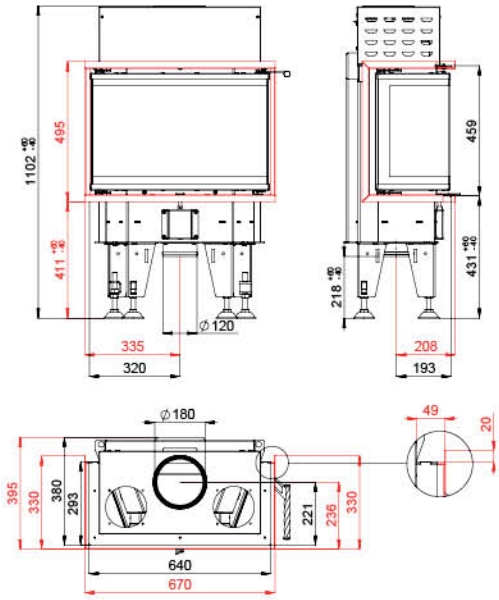

BImSchV Stufe 2

15a B - VG

ČSN EN 13229

eco design

3 - 6 kW | 84 % | 180 mm | 250 mm | 435 x 220 mm | 624 x 250 x 400 mm

12 Pa | 1,53 kg/h | 206 °C | 4,3 g/s | 0,0946 % | 17 mg/Nm³ | 115 kg

BEF **FEEL 7**

BImSchV
Stufe 2

15a
B - VG

ČSN EN
13229

eco design

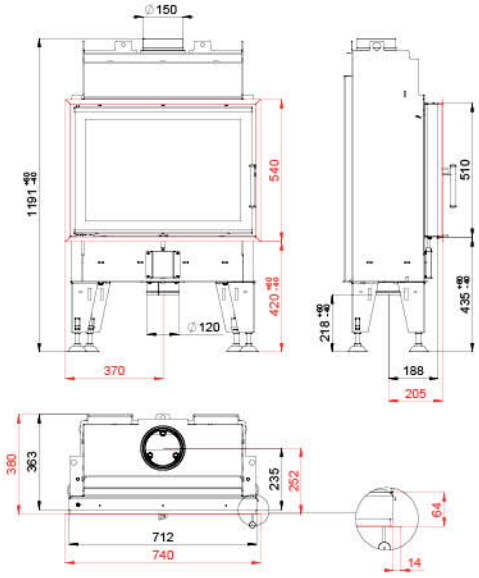

4 - 7 kW | 82 % | 150 mm | 400 mm | 520 x 220 mm | 670 x 468 mm

12 Pa | 2,47 kg/h | 232 °C | 6,5 g/s | 0,0811 % | 18 mg/Nm³ | 137 kg

BEF **FEEL 7 CL/CP**

BImSchV
Stufe 2

15a
B - VG

ČSN EN
13229

eco design

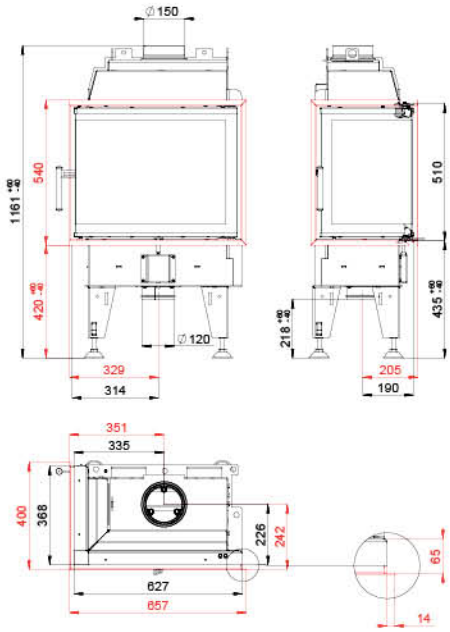

4 - 7 kW | 82 % | 150 mm | 330 mm | 465 x 215 mm | 600 x 340 x 468 mm

12 Pa | 2,47 kg/h | 232 °C | 6,5 g/s | 0,0811 % | 18 mg/Nm³ | 124 kg

BEF **FEEL V 7**

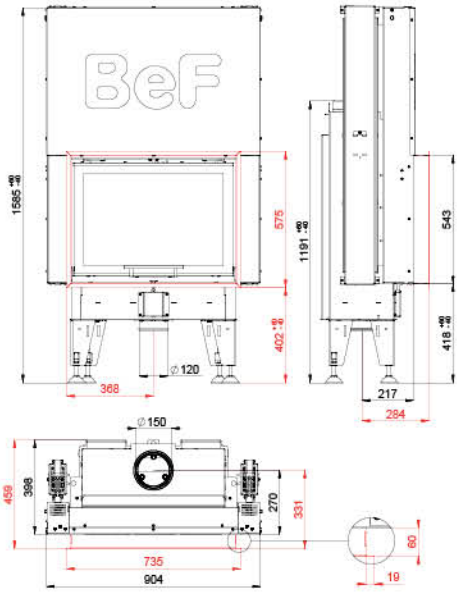

BImSchV Stufe 2

15a B - VG

ČSN EN 13229

eco design

4 - 7 kW | 82 % | 150 mm | 400 mm | 520 x 220 mm | 670 x 468 mm

12 Pa | 2,47 kg/h | 232 °C | 6,5 g/s | 0,0811 % | 18 mg/Nm³ | 214 kg

BEF **FEEL V 7 CL/CP**

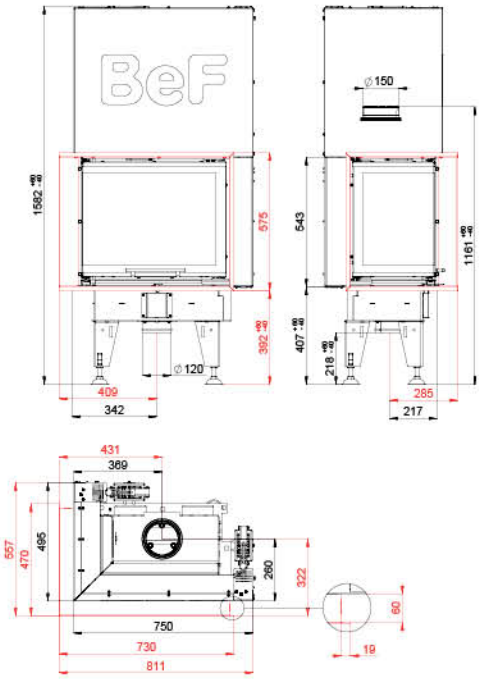

BImSchV Stufe 2

15a B - VG

ČSN EN 13229

eco design

4 - 7 kW | 82 % | 150 mm | 330 mm | 465 x 215 mm | 600 x 340 x 468 mm

12 Pa | 2,47 kg/h | 232 °C | 6,5 g/s | 0,0811 % | 18 mg/Nm³ | 213 kg

BEF **FEEL 8**

BImSchV
Stufe 2

15a
B - VG

ČSN EN
13229

eco design

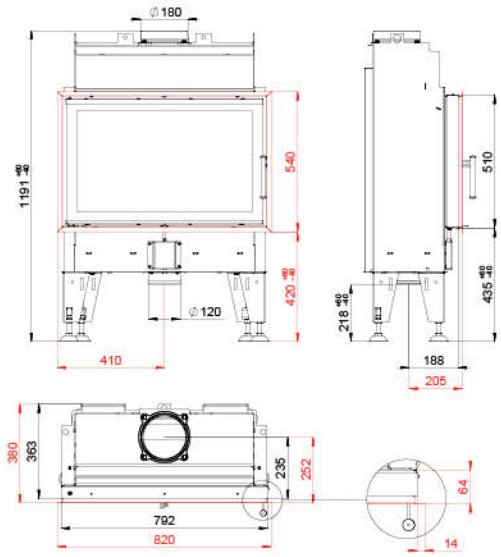

5 - 8 kW | 85 % | 180 mm | 500 mm | 600 x 220 mm | 750 x 468 mm

12 Pa | 2,54 kg/h | 212 °C | 6 g/s | 0,0932 % | 16 mg/Nm³ | 149 kg

BEF **FEEL 8 CL/CP**

BImSchV
Stufe 2

15a
B - VG

ČSN EN
13229

eco design

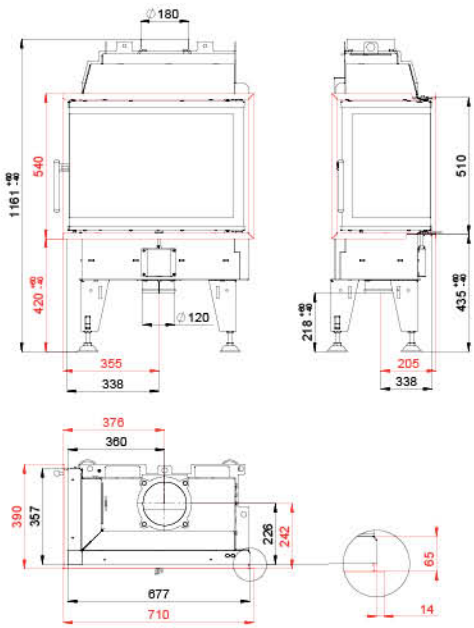

5 - 8 kW | 85 % | 180 mm | 400 mm | 515 x 215 mm | 650 x 330 x 468 mm

12 Pa | 2,54 kg/h | 212 °C | 6 g/s | 0,0932 % | 16 mg/Nm³ | 129 kg

BEF **FEEL V 8**

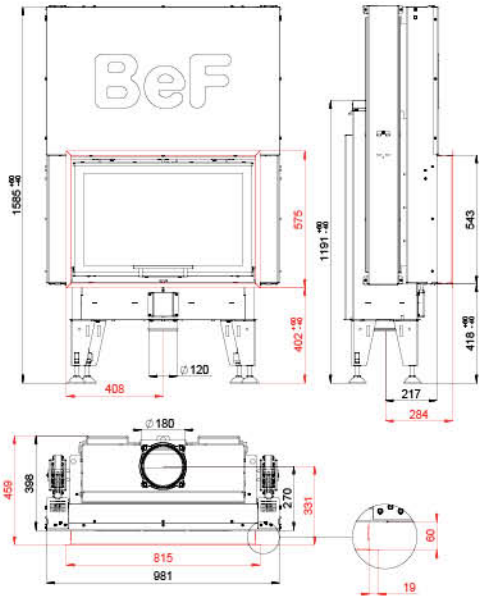

BImSchV Stufe 2

15a B - VG

ČSN EN 13229

eco design

5 - 8 kW | 85 % | 180 mm | 500 mm | 600 x 220 mm | 750 x 468 mm

12 Pa | 2,54 kg/h | 212 °C | 6 g/s | 0,0932 % | 16 mg/Nm³ | 231 kg

BEF **FEEL V 8 CL/CP**

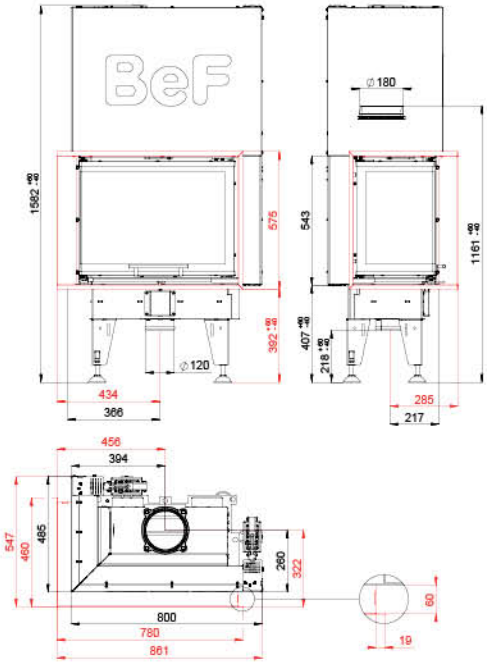

BImSchV Stufe 2

15a B - VG

ČSN EN 13229

eco design

5 - 8 kW | 85 % | 180 mm | 400 mm | 515 x 215 mm | 650 x 330 x 468 mm

12 Pa | 2,54 kg/h | 212 °C | 6 g/s | 0,0932 % | 16 mg/Nm³ | 215 kg

BEF **FLAT 4 L**

ČSN EN
13229

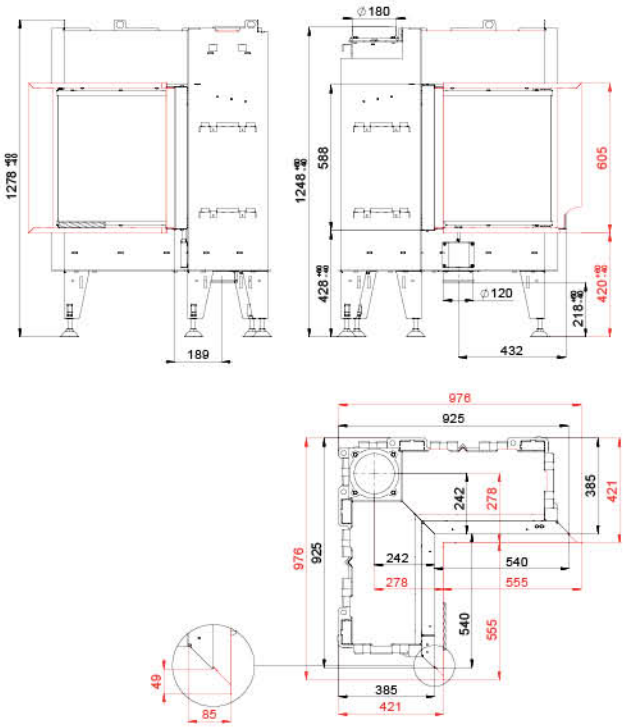

5 - 8 kW | 82 % | 180 mm | 600 mm | 707 x 229 mm / 707 x 229 mm | 1x 480 x 480 x 532 mm

10 Pa | 2,22 kg/h | 267 °C | 9 g/s | 0,0673 % | 26 mg/Nm³ | 262 kg

BEF **FLAT V 4 L**

BImSchV
Stufe 2

15a
B - VG

ČSN EN
13229

eco design

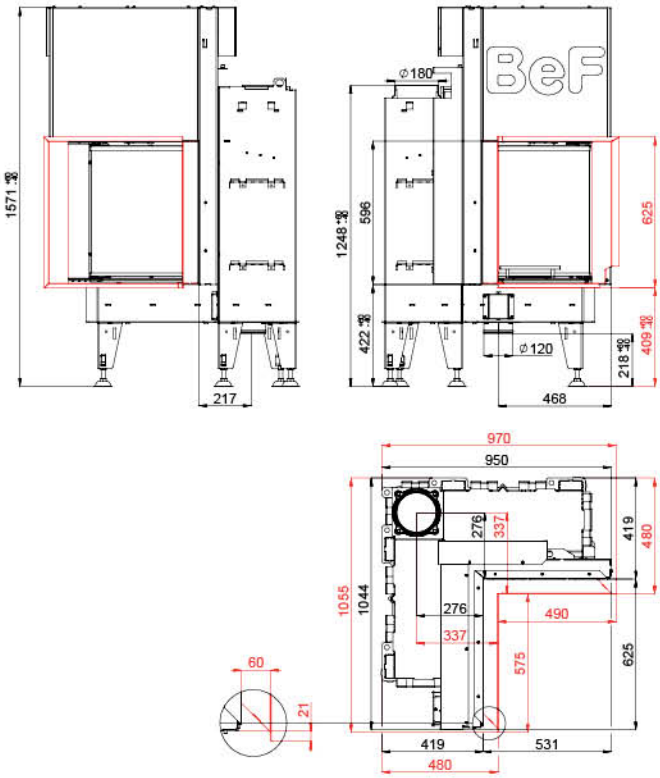

5 - 8 kW | 82 % | 180 mm | 600 mm | 707 x 229 mm / 707 x 229 mm | 1x 480 x 480 x 532 mm

10 Pa | 2,22 kg/h | 267 °C | 9 g/s | 0,0673 % | 26 mg/Nm³ | 351 kg

BEF **FLAT 6 L**

ČSN EN
13229

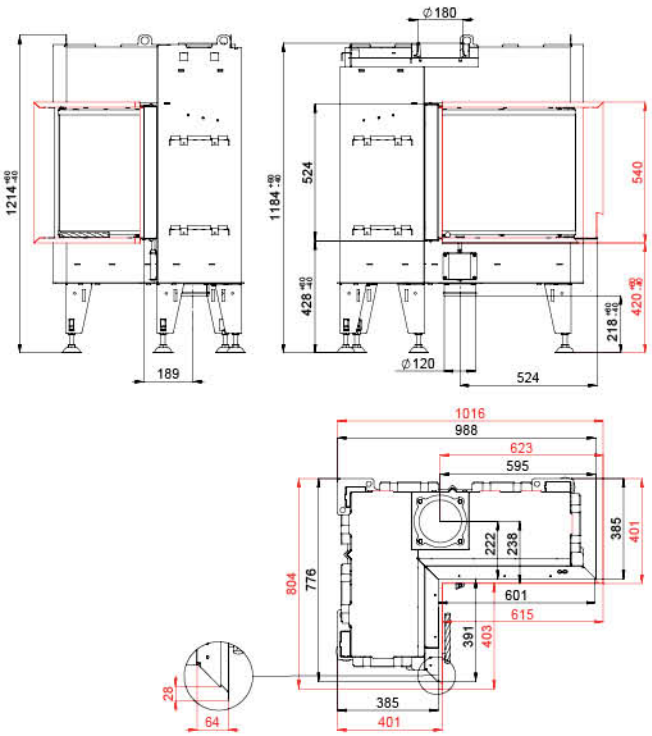

3 - 6 kW | 81 % | 180 mm | 400 mm | 767 x 229 mm / 558 x 229 mm | 530 x 330 x 468 mm

12 Pa | 1,53 kg/h | 206 °C | 4,3 g/s | 0,0946 % | 17 mg/Nm³ | 244 kg

BEF **FLAT V 6 L**

BImSchV
Stufe 2

15a
B - VG

ČSN EN
13229

eco design

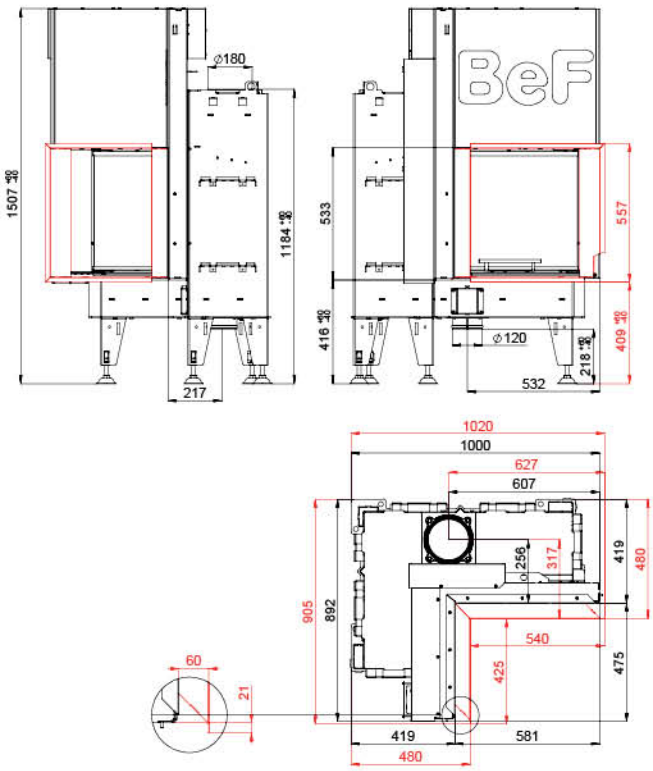

3 - 6 kW | 81 % | 180 mm | 400 mm | 767 x 229 mm / 558 x 229 mm | 530 x 330 x 468 mm

12 Pa | 1,53 kg/h | 206 °C | 4,3 g/s | 0,0946 % | 17 mg/Nm³ | 322 kg

BEF **FLAT 8 L**

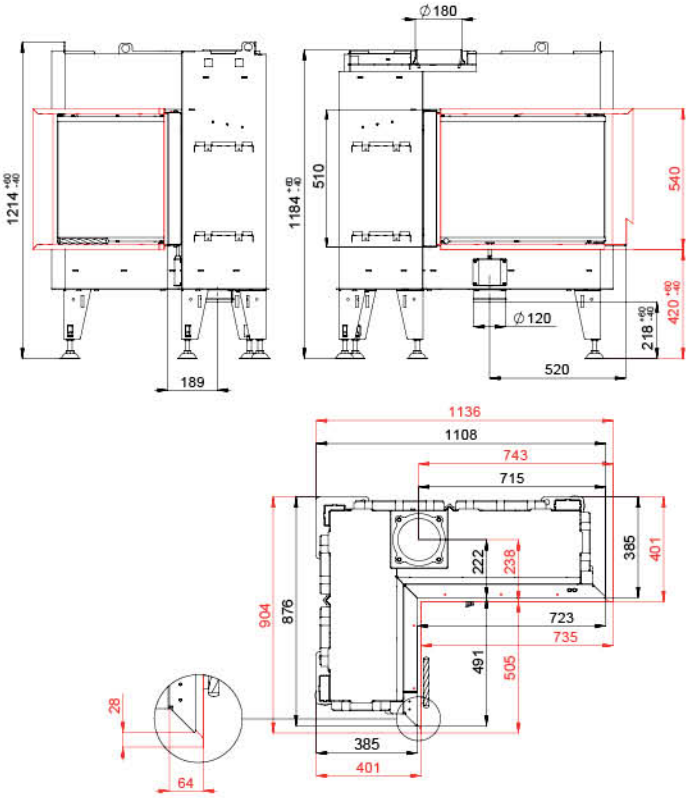

BImSchV
Stufe 2

5 - 8 kW | 81 % | 180 mm | 500 mm | 891 x 229 mm / 661 x 229 mm | 650 x 430 x 468 mm

12 Pa | 2,54 kg/h | 212 °C | 6 g/s | 0,0932 % | 16 mg/Nm³ | 249 kg

BEF **FLAT V 8 L**

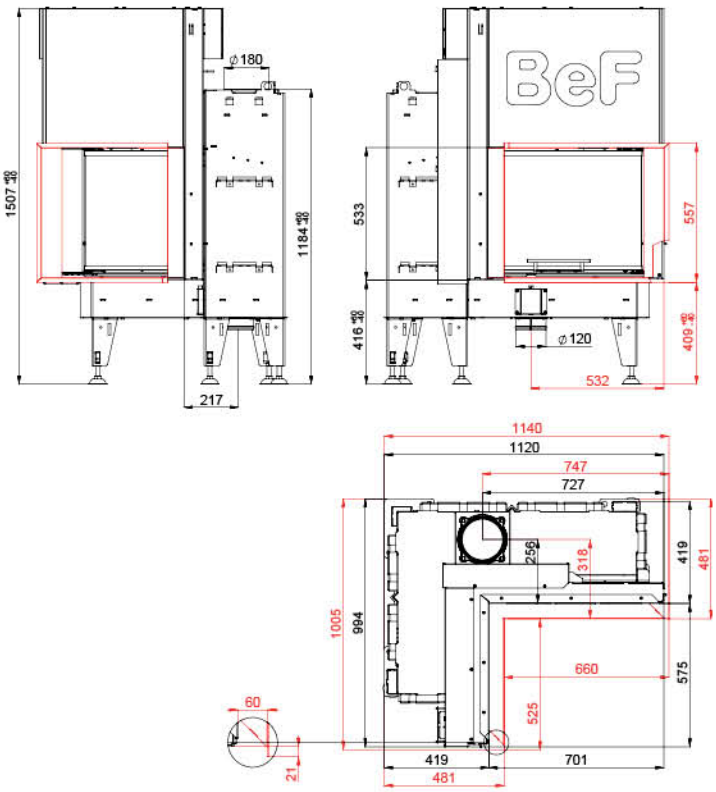

BImSchV
Stufe 2

15a
B - VG

ČSN EN
13229

eco design

5 - 8 kW | 81 % | 180 mm | 500 mm | 891 x 229 mm / 661 x 229 mm | 650 x 430 x 468 mm

12 Pa | 2,54 kg/h | 212 °C | 6 g/s | 0,0932 % | 16 mg/Nm³ | 356 kg

BEF **LONG 7**

ČSN EN
13229

eco design

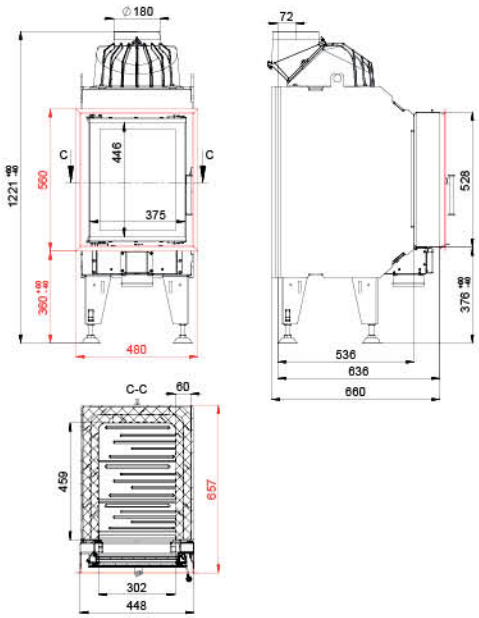

3 - 21 kW | 95 % | 180 mm | 400 mm | 300 x 460 mm | 320 x 395 mm + 375 x 478 mm

12 Pa | 4,02 kg/h | 329 °C | 18,7 g/s | 0,0535 % | 32 mg/Nm³ | 244 kg

BEF **DOUBLE 6 FEEL**

BImSchV
Stufe 2

15a
B - VG

ČSN EN
13229

eco design

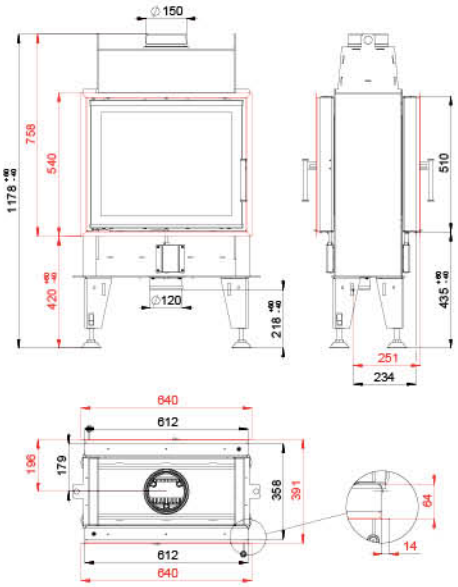

3 - 6 kW	84 %	150 mm	330 mm	416 x 210 mm	1x 570 x 468 mm 570 x 468 mm	
12 Pa	1,53 kg/h	206 °C	4,3 g/s	0,0946 %	17 mg/Nm³	110 kg

BEF **DOUBLE 6 N FEEL**

BImSchV
Stufe 2

15a
B - VG

ČSN EN
13229

eco design

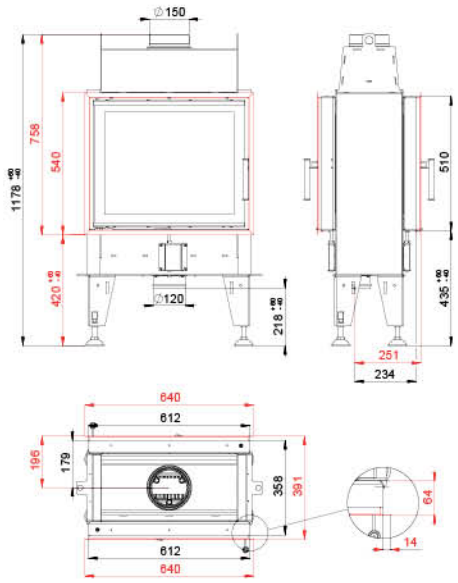

3 - 6 kW	84 %	150 mm	330 mm	416 x 210 mm	1x 570 x 468 mm	
12 Pa	1,53 kg/h	206 °C	4,3 g/s	0,0946 %	17 mg/Nm³	121 kg

BEF **DOUBLE V 6 FEEL**

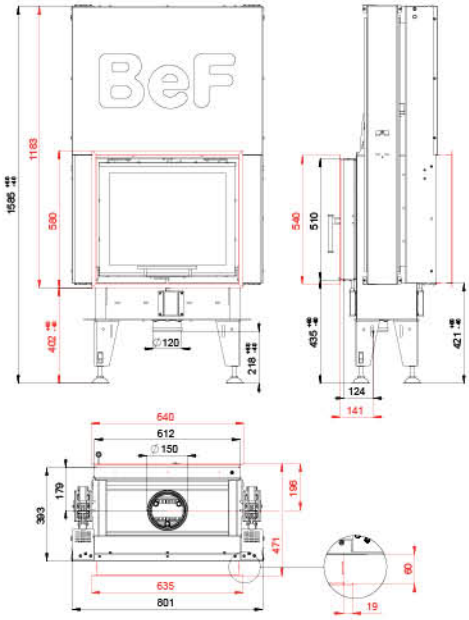

BImSchV Stufe 2

15a B - VG

ČSN EN 13229

eco design

3 - 6 kW	84 %	150 mm	330 mm	416 x 210 mm	1x 570 x 468 mm 570 x 468 mm	
12 Pa	1,53 kg/h	206 °C	4,3 g/s	0,0946 %	17 mg/Nm³	194 kg

BEF **DOUBLE V 6 N FEEL**

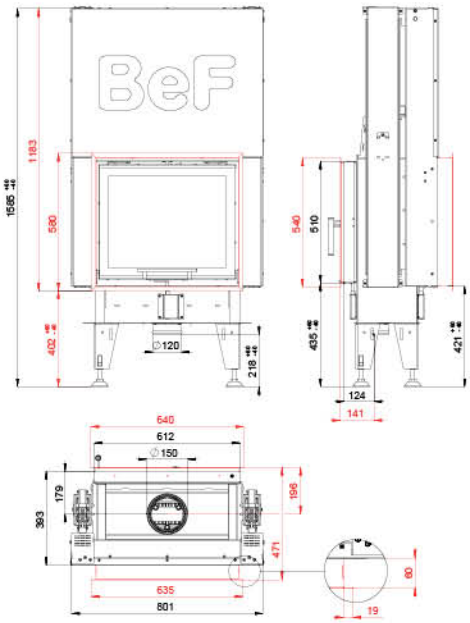

BImSchV Stufe 2

15a B - VG

ČSN EN 13229

eco design

3 - 6 kW	84 %	150 mm	330 mm	416 x 210 mm	1x 570 x 468 mm	
12 Pa	1,53 kg/h	206 °C	4,3 g/s	0,0946 %	17 mg/Nm³	196 kg

BEF **DOUBLE 7 FEEL**

BImSchV
Stufe 2

15a
B - VG

ČSN EN
13229

eco design

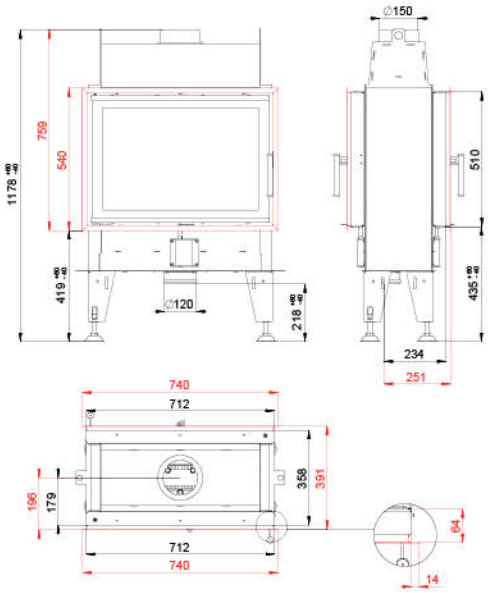

4 - 7 kW	82 %	150 mm	400 mm	504 x 210 mm	1x 670 x 468 mm 670 x 468 mm

12 Pa	2,47 kg/h	232 °C	6,5 g/s	0,0811 %	18 mg/Nm³	123 kg

BEF **DOUBLE 7 N FEEL**

BImSchV
Stufe 2

15a
B - VG

ČSN EN
13229

eco design

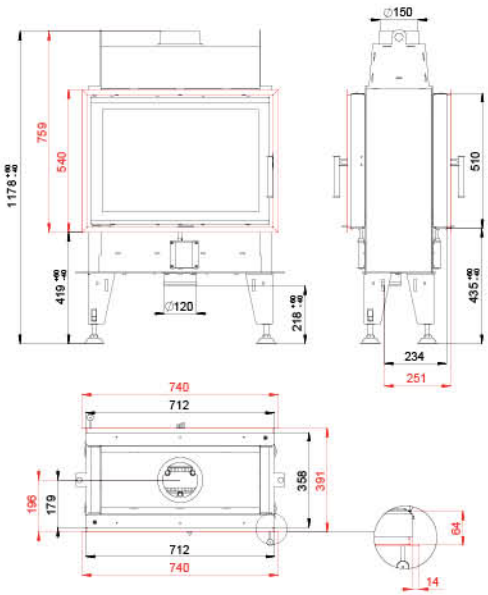

4 - 7 kW	82 %	150 mm	400 mm	504 x 210 mm	1x 670 x 468 mm

12 Pa	2,47 kg/h	232 °C	6,5 g/s	0,0811 %	18 mg/Nm³	129 kg

BEF **DOUBLE V 7 FEEL**

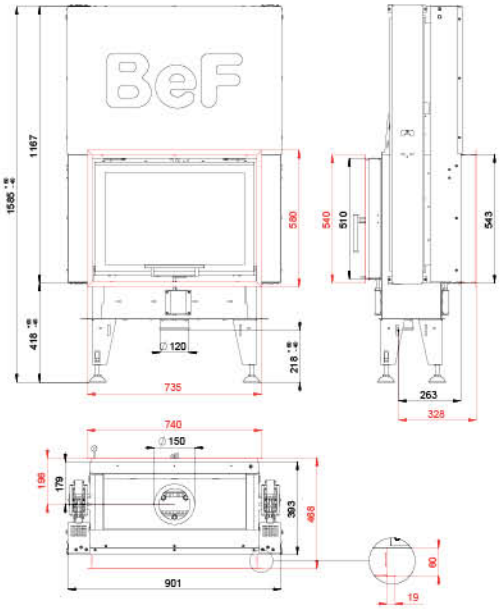

BImSchV Stufe 2

15a B - VG

ČSN EN 13229

eco design

4 - 7 kW | 82 % | 150 mm | 400 mm | 504 x 210 mm | 1x 670 x 468 mm 670 x 468 mm

12 Pa | 2,47 kg/h | 232 °C | 6,5 g/s | 0,0811 % | 18 mg/Nm³ | 200 kg

BEF **DOUBLE V 7 N FEEL**

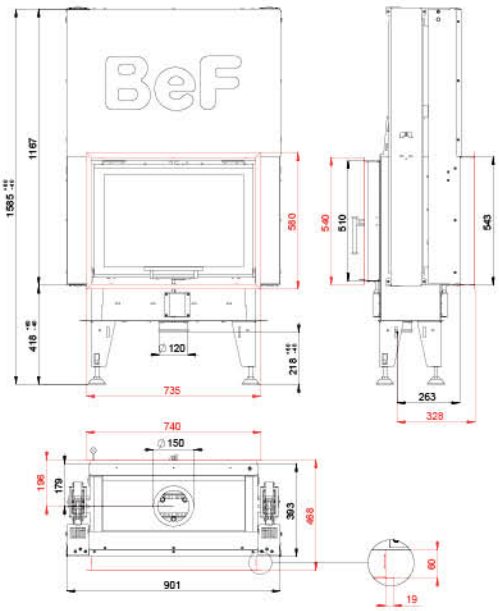

BImSchV Stufe 2

15a B - VG

ČSN EN 13229

eco design

4 - 7 kW | 82 % | 150 mm | 400 mm | 504 x 210 mm | 1x 670 x 468 mm

12 Pa | 2,47 kg/h | 232 °C | 6,5 g/s | 0,0811 % | 18 mg/Nm³ | 206 kg

BEF **TWIN 7 CL/CP**

BImSchV
Stufe 2

15a
B - VG

ČSN EN
13229

eco design

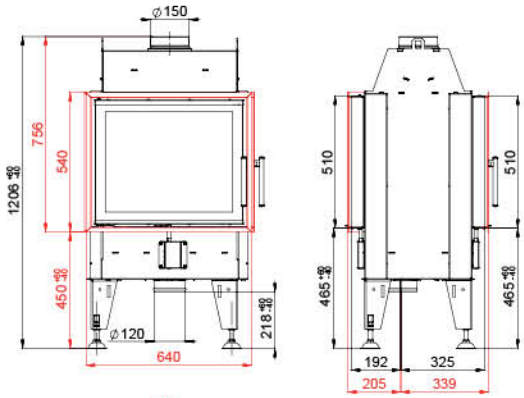

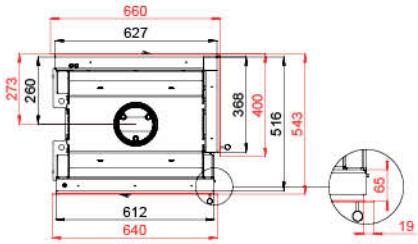

7 - 11 kW | 81 % | 150 mm | 330 mm | 452 x 330 mm | 1x 600 x 340 x 468 mm 570 x 468 mm

10 Pa | 3,2 kg/h | 263 °C | 8,5 g/s | 0,085 % | 17 mg/Nm³ | 147 kg

BEF **TWIN 7 CL-CL/CP-CP**

BImSchV
Stufe 2

15a
B - VG

ČSN EN
13229

eco design

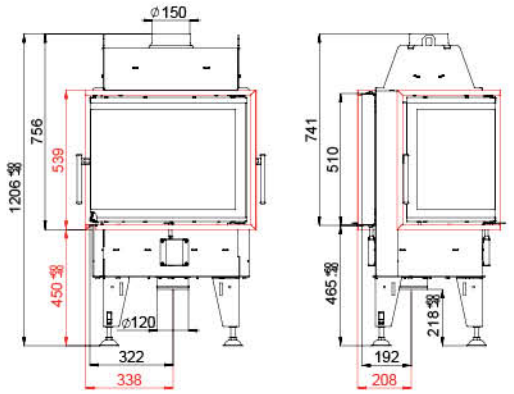

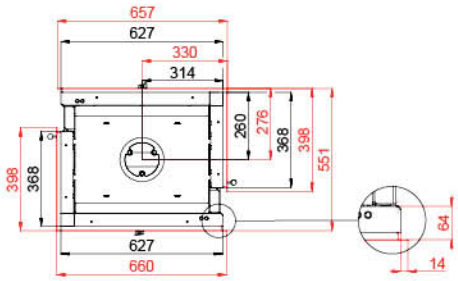

7 - 11 kW | 81 % | 150 mm | 330 mm | 452 x 330 mm | 1x 600 x 340 x 468 mm 600 x 340 x 468 mm

10 Pa | 3,2 kg/h | 263 °C | 8,5 g/s | 0,085 % | 17 mg/Nm³ | 137 kg

BEF **TWIN 7 N CL/CP**

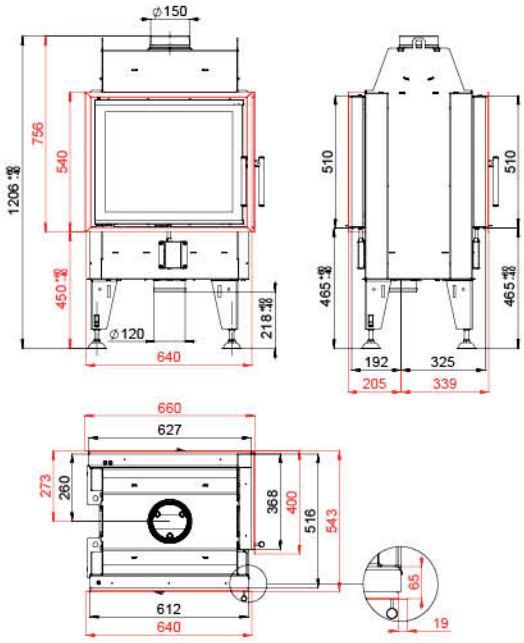

BImSchV Stufe 2

15a B - VG

ČSN EN 13229

eco design

7 - 11 kW | 81 % | 150 mm | 330 mm | 452 x 330 mm | 600 x 340 x 468 mm, 570 x 468 mm

10 Pa | 3,2 kg/h | 263 °C | 8,5 g/s | 0,085 % | 17 mg/Nm³ | 142 kg

BEF **TWIN V 7 CL/CP**

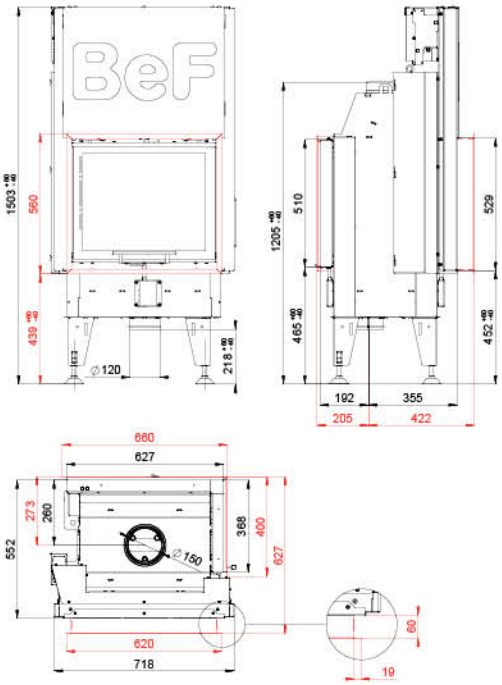

BImSchV Stufe 2

15a B - VG

ČSN EN 13229

eco design

7 - 11 kW | 81 % | 150 mm | 330 mm | 452 x 330 mm | 600 x 340 x 468 mm, 570 x 468 mm

10 Pa | 3,2 kg/h | 263 °C | 8,5 g/s | 0,085 % | 17 mg/Nm³ | 193 kg

BEF **TWIN 8 II.**

BImSchV
Stufe 2

15a
B - VG

ČSN EN
13229

eco design

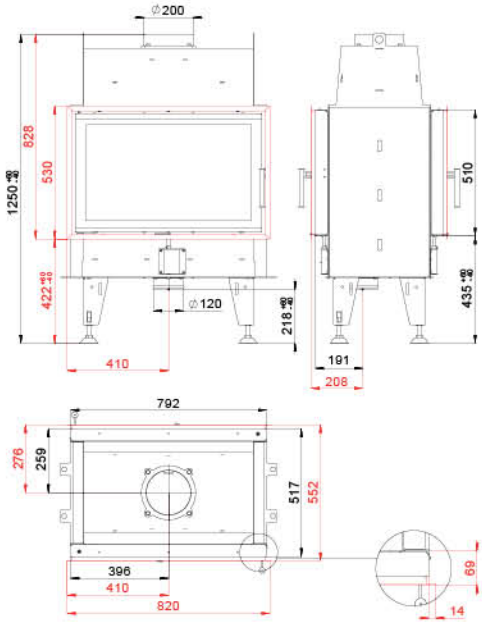

5 - 11 kW | 80 % | 200 mm | 500 mm | 615 x 320 mm | 1x 750 x 468 mm 750 x 468 mm

12 Pa | 2,75 kg/h | 240 °C | 9,3 g/s | 0,0993 % | 30 mg/Nm³ | 197 kg

BEF **TWIN 8 N II.**

BImSchV
Stufe 2

15a
B - VG

ČSN EN
13229

eco design

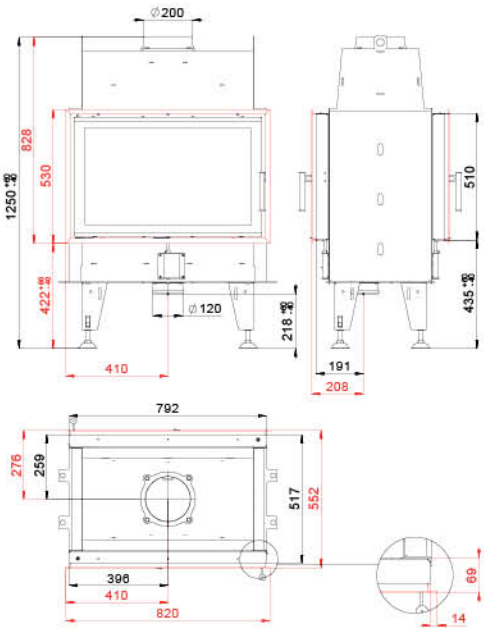

5 - 11 kW | 80 % | 200 mm | 500 mm | 615 x 320 mm | 1x 750 x 468 mm

12 Pa | 2,75 kg/h | 240 °C | 9,3 g/s | 0,0993 % | 30 mg/Nm³ | 198 kg

BEF **TWIN V 8 II.**

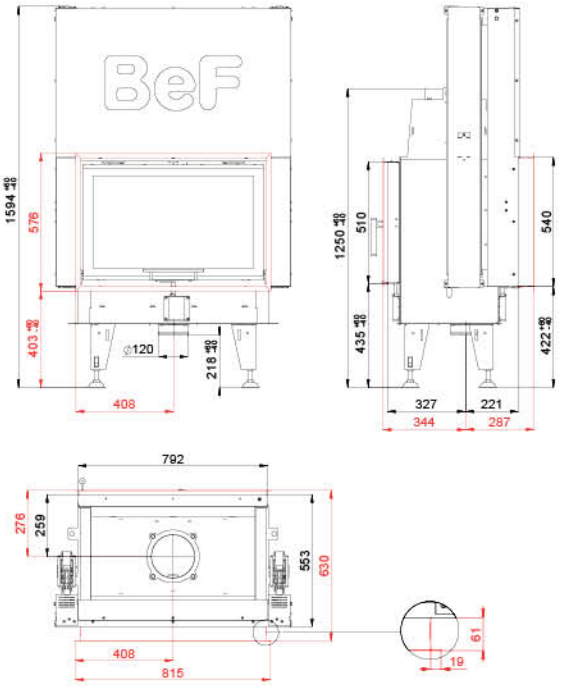

BImSchV Stufe 2

15a B - VG

ČSN EN 13229

eco design

5 - 11 kW | 80 % | 200 mm | 500 mm | 615 x 320 mm | 1x 750 x 468 mm 750 x 468 mm

12 Pa | 2,75 kg/h | 240 °C | 9,3 g/s | 0,0993 % | 30 mg/Nm³ | 276 kg

BEF **TWIN V 8 N II.**

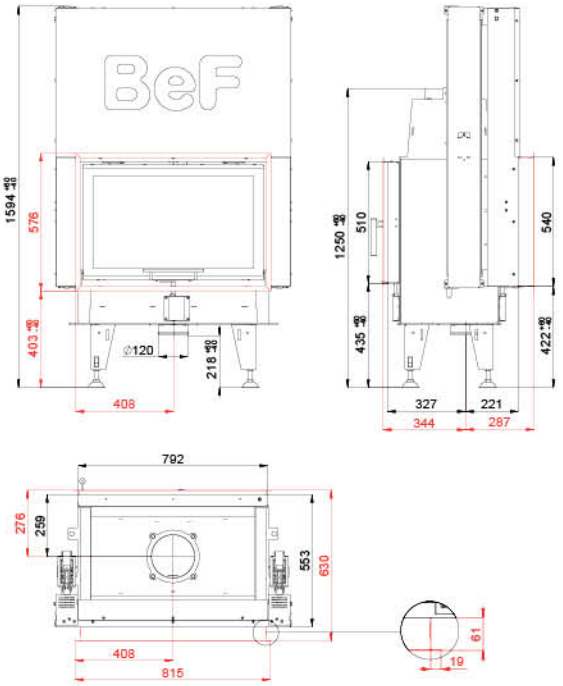

BImSchV Stufe 2

15a B - VG

ČSN EN 13229

eco design

5 - 11 kW | 80 % | 200 mm | 500 mm | 615 x 320 mm | 1x 750 x 468 mm

12 Pa | 2,75 kg/h | 240 °C | 9,3 g/s | 0,0993 % | 30 mg/Nm³ | 280 kg

BEF **TWIN 10 II.**

BImSchV
Stufe 2

15a
B - VG

ČSN EN
13229

eco design

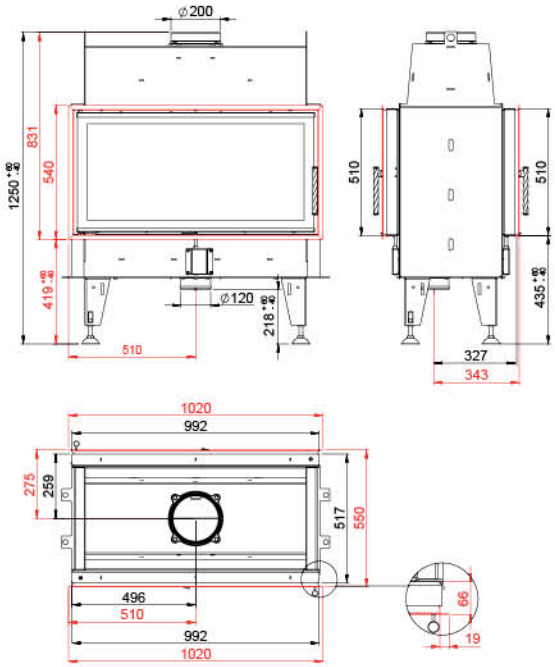

8 - 14,5 kW | 83 % | 200 mm | 500 mm | 815 x 320 mm | 950 x 468 mm
950 x 468 mm

10 Pa | 3,95 kg/h | 242 °C | 10,6 g/s | 0,0981 % | 29 mg/Nm³ | 226 kg

BEF **TWIN 10 N II.**

BImSchV
Stufe 2

15a
B - VG

ČSN EN
13229

eco design

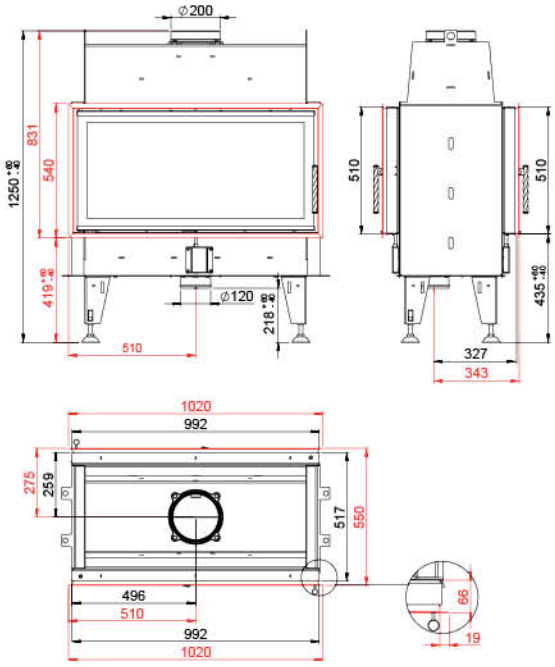

8 - 14,5 kW | 83 % | 200 mm | 500 mm | 815 x 320 mm | 950 x 468 mm

10 Pa | 3,95 kg/h | 242 °C | 10,6 g/s | 0,0981 % | 29 mg/Nm³ | 236 kg

BEF **TWIN V 10 II.**

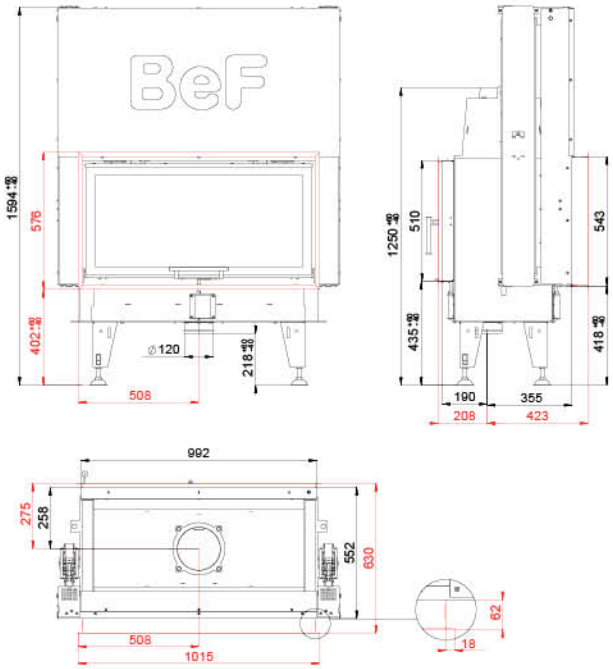

BImSchV Stufe 2

15a B - VG

ČSN EN 13229

eco design

8 - 14,5 kW | 83 % | 200 mm | 500 mm | 815 x 320 mm | 1x 950 x 468 mm 950 x 468 mm

10 Pa | 3,95 kg/h | 242 °C | 10,6 g/s | 0,0981 % | 29 mg/Nm³ | 307 kg

BEF **TWIN V 10 N II.**

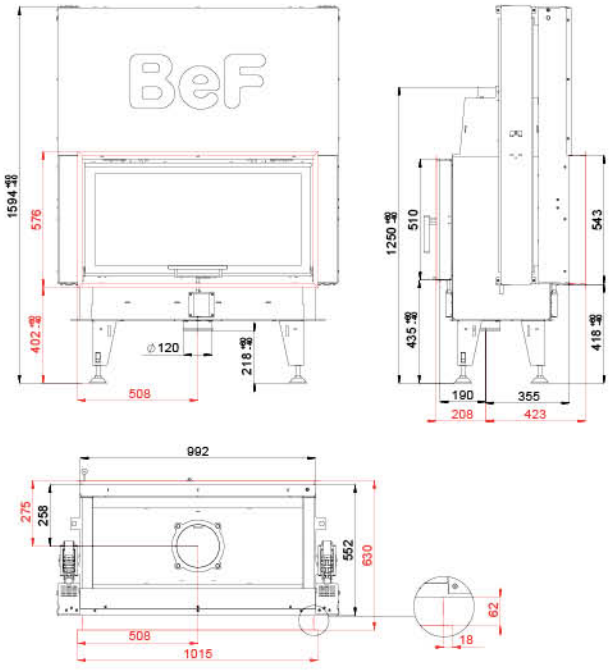

BImSchV Stufe 2

15a B - VG

ČSN EN 13229

eco design

8 - 14,5 kW | 83 % | 200 mm | 500 mm | 815 x 320 mm | 1x 950 x 468 mm

10 Pa | 3,95 kg/h | 242 °C | 10,6 g/s | 0,0981 % | 29 mg/Nm³ | 366 kg

BEF **EFFI 6 S**

ČSN EN
13229

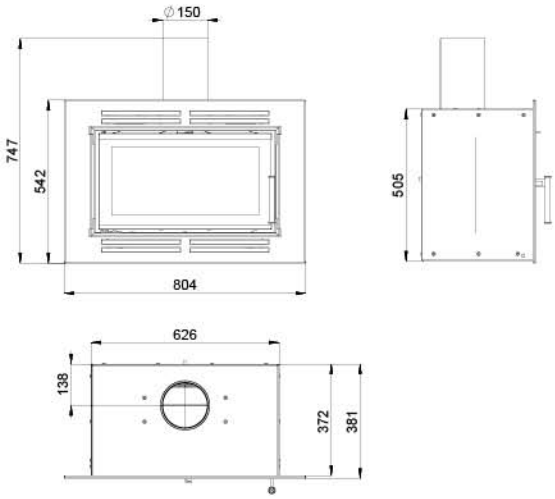

3 - 6 kW | 84 % | 150 mm | 330 mm | 410 x 190 mm | 570 x 308 mm

12 Pa | 1,53 kg/h | 206 °C | 4,3 g/s | 0,0946 % | 17 mg/Nm³ | 97 kg

BEF **SPIRIT 7**

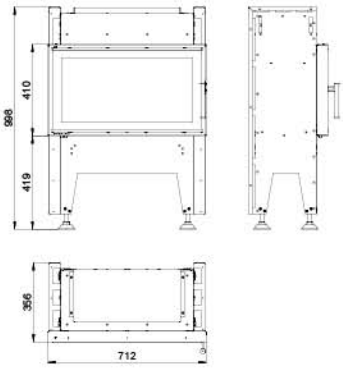

ČSN EN 13229

- White
- Pearl Beige
- Latte
- Mocca
- Antracit
- Bordeaux
- Ferrari
- Azzurro

3,5 h. | ETHANOL 2,5 l | 57 kg

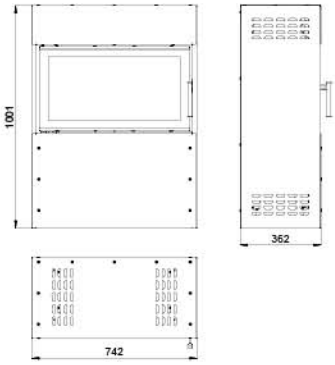

3,5 h. | ETHANOL 2,5 l | 76 kg

BEF **RUSTICAL**

16:9

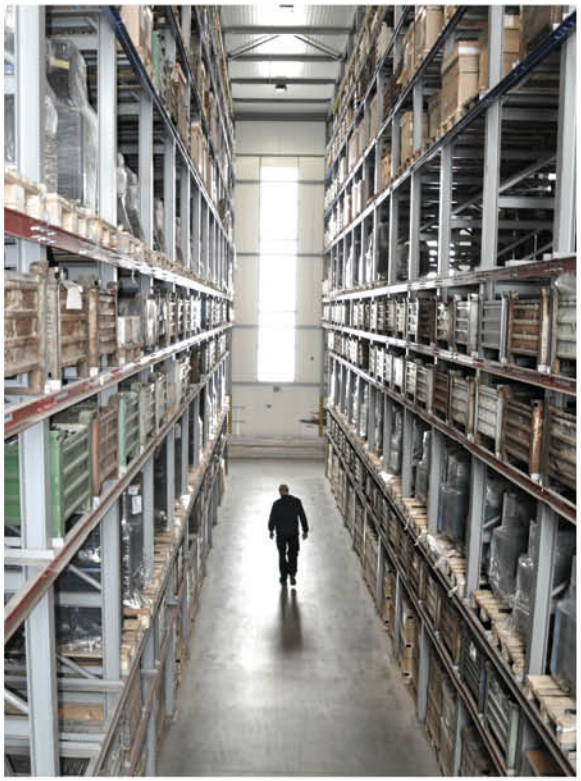

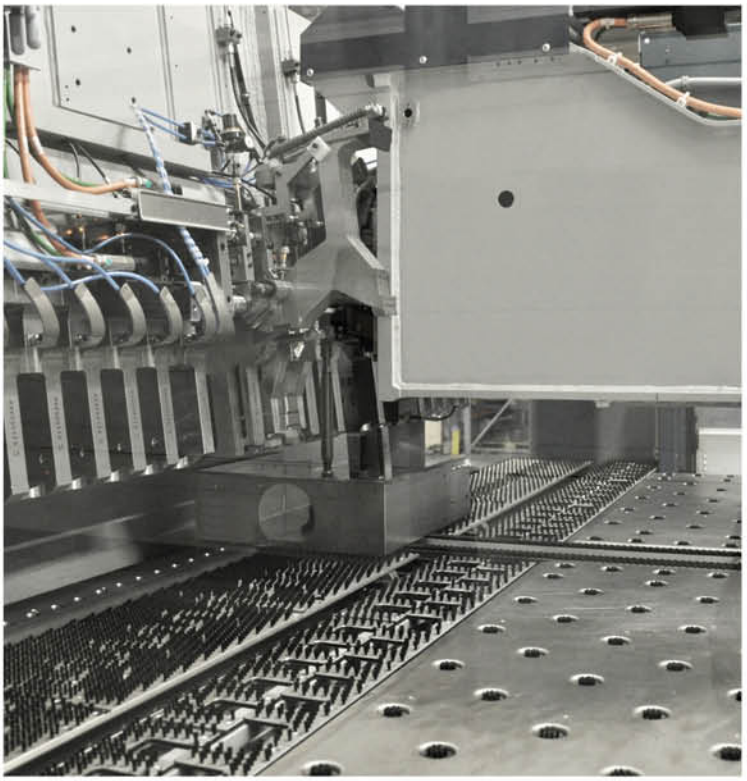

* These data are informative, the manufacturer reserves the right to change.

BEF HOME
fire for your heart

CATALOGUE OF HOT WATER FIREPLACE INSERTS

BEF HOME
fire for your heart

CZ | Kotvrdovice 277
679 07 Kotvrdovice
Czech Republic

tel.: +420 516 428 240
e-mail: info@bef.cz
IČ: 25 52 46 82
DIČ: CZ 25 52 46 82

SK | Turá Lúka 97
907 03 Myjava
Slovakia

tel.: +421 346 216 790
e-mail: info@bef.sk

PL | Bąków ul. Główna 4a
43-246 Strumień
Poland

tel.: +48 530 712 534
tel.: +48 530 712 624
e-mail: info@befpolska.pl

FR | 1 Place de l'Homme de Fer
67 000 Strasbourg
France

tél.: 00 33 672 383 113
e-mail: info@foyers-bef.fr

BEF **AQUALITE 6**

BImSchV
Stufe 2

15a
B - VG

ČSN EN
13229

eco design

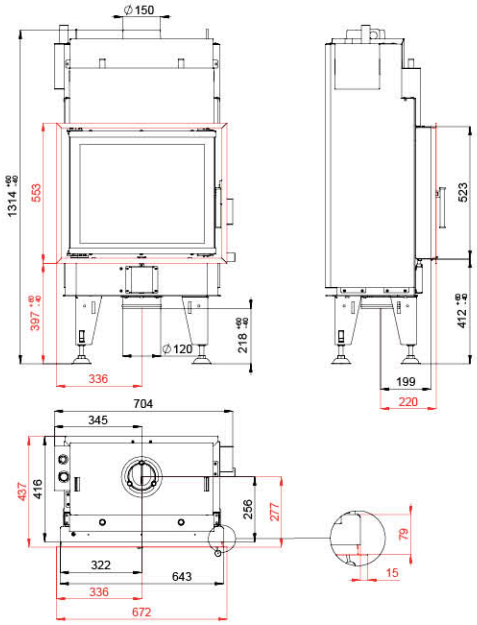

5 - 10 kW | 3,5 - 8 kW | 87 % | 150 mm | 400 mm | 445 x 225 mm | 2x 570 x 468 mm + 1x 510 x 400 mm

11 Pa | 2,22 kg/h | 178 °C | 6,5 g/s | 0,0840 % | 18 mg/Nm³ | 225 kg

BEF **AQUALITE 7**

ČSN EN
13229

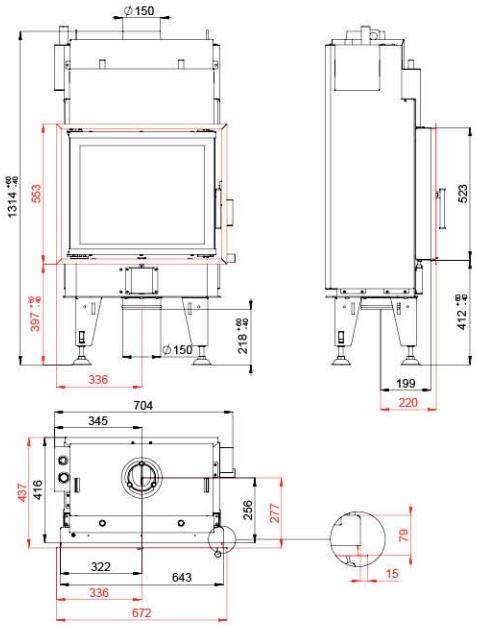

11 - 17 kW | 6 - 11 kW | 85 % | 150 mm | 400 mm | 445 x 225 mm | 2x 570 x 468 mm + 1x 510 x 400 mm

12 Pa | 4,05 kg/h | 204 °C | 12,7 g/s | 0,0499 % | 38 mg/Nm³ | 231 kg

BEF **AQUATIC WH 70**

BImSchV
Stufe 2

15a
B - VG

ČSN EN
13229

eco design

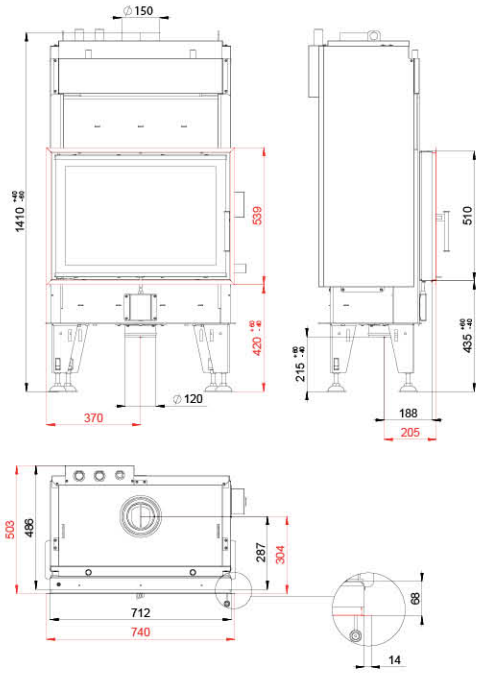

9 - 14 kW	6 - 9 kW	87 %	150 mm	400 mm	520 x 295 mm	670 x 468 mm

12 Pa	2,96 kg/h	169 °C	9,2 g/s	0,0911 %	29 mg/Nm³	279 kg

BEF **AQUATIC WH 70 CL/CP**

BImSchV
Stufe 2

15a
B - VG

ČSN EN
13229

eco design

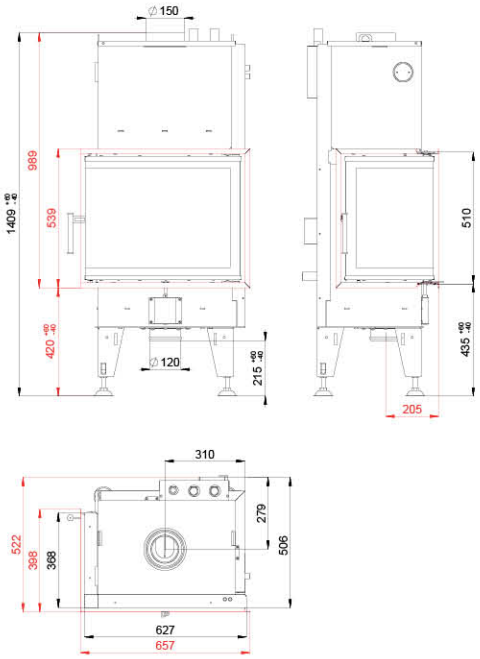

9 - 14 kW	5 - 9 kW	87 %	150 mm	330 mm	465 x 295 mm	600 x 340 x 468 mm

12 Pa	2,96 kg/h	169 °C	9,2 g/s	0,0911 %	29 mg/Nm³	230 kg

BEF **AQUATIC WH V 70**

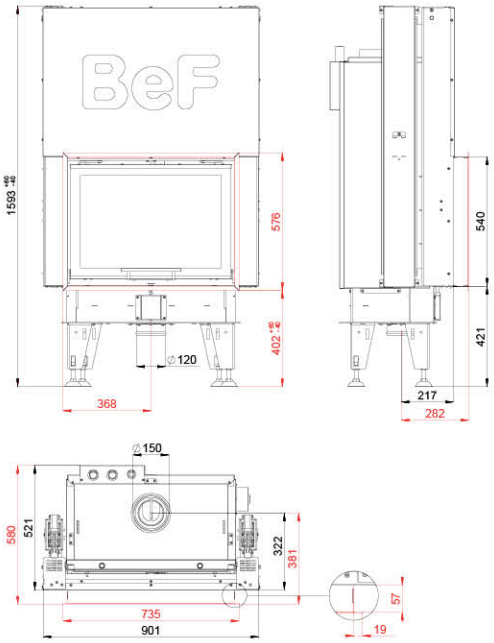

BImSchV Stufe 2

15a B - VG

ČSN EN 13229

eco design

9 - 14 kW | 6 - 9 kW | 87 % | 150 mm | 400 mm | 520 x 295 mm | 670 x 468 mm

12 Pa | 2,96 kg/h | 169 °C | 9,2 g/s | 0,0911 % | 29 mg/Nm³ | 352 kg

BEF **AQUATIC WH V 70 CL/CP**

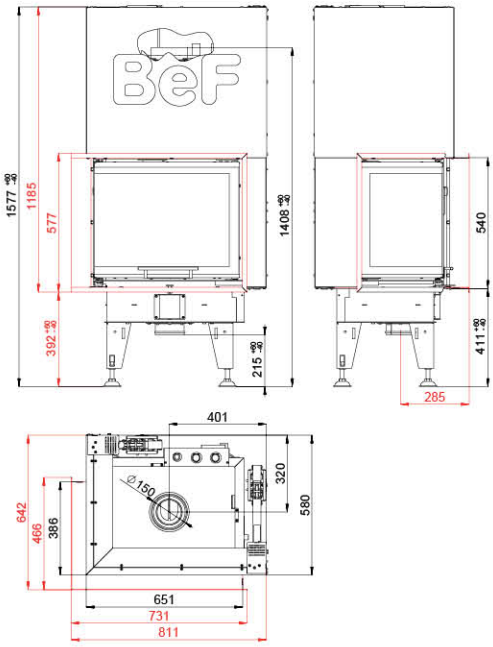

BImSchV Stufe 2

15a B - VG

ČSN EN 13229

eco design

9 - 14 kW | 5 - 9 kW | 87 % | 150 mm | 330 mm | 465 x 295 mm | 600 x 340 x 468 mm

12 Pa | 2,96 kg/h | 169 °C | 9,2 g/s | 0,0911 % | 29 mg/Nm³ | 318 kg

BEF **AQUATIC WH 80**

BImSchV
Stufe 2

15a
B - VG

ČSN EN
13229

eco design

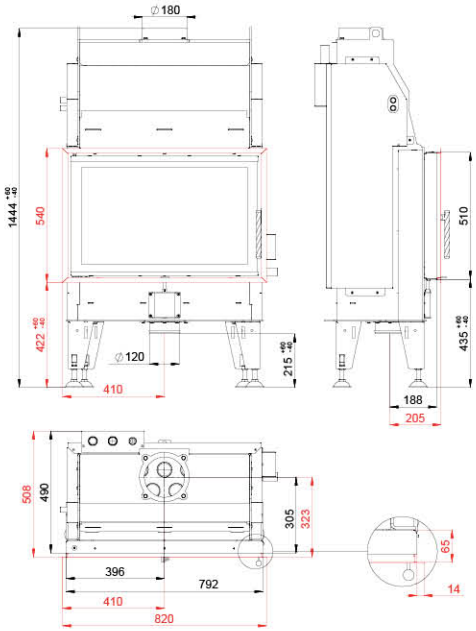

9 - 16 kW	7 - 10 kW	84 %	180 mm	500 mm	615 x 301 mm	750 x 468 mm

10 Pa	4,06 kg/h	191 °C	13,2 g/s	0,0441 %	22 mg/Nm³	272 kg

BEF **AQUATIC WH 80 CL/CP**

BImSchV
Stufe 2

15a
B - VG

ČSN EN
13229

eco design

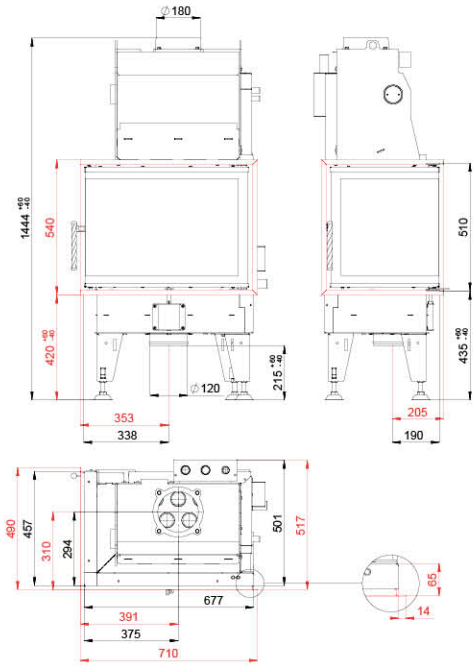

9 - 16 kW	5 - 8 kW	84 %	180 mm	400 mm	520 x 298 mm	650 x 430 x 468 mm

10 Pa	4,06 kg/h	191 °C	13,2 g/s	0,0441 %	22 mg/Nm³	221 kg

BEF **AQUATIC WH V 80**

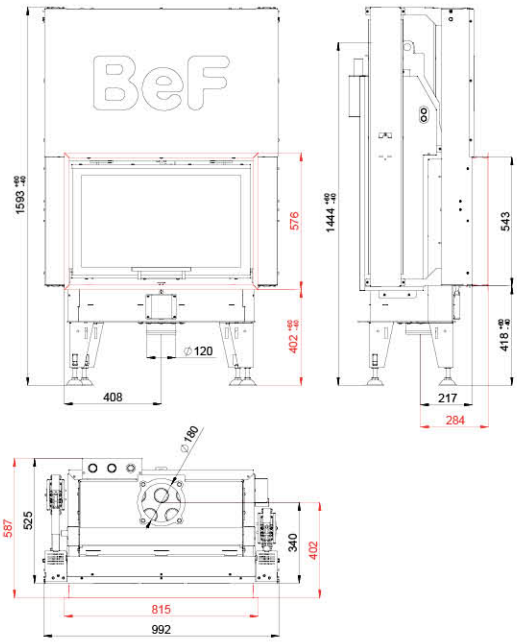

BImSchV Stufe 2

15a B - VG

ČSN EN 13229

eco design

9 - 16 kW | 7 - 10 kW | 84 % | 180 mm | 500 mm | 615 x 301 mm | 750 x 468 mm

10 Pa | 4,06 kg/h | 191 °C | 13,2 g/s | 0,0441 % | 22 mg/Nm³ | 337 kg

BEF **AQUATIC WH V 80 CL/CP**

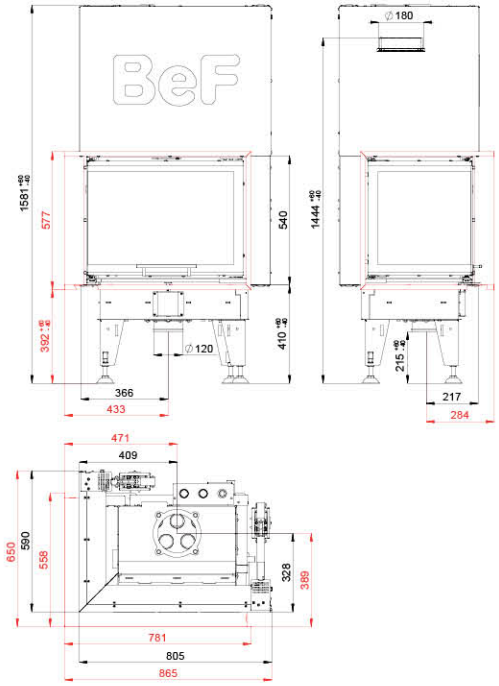

BImSchV Stufe 2

15a B - VG

ČSN EN 13229

eco design

9 - 16 kW | 5 - 8 kW | 84 % | 180 mm | 400 mm | 520 x 298 mm | 650 x 430 x 468 mm

10 Pa | 4,06 kg/h | 191 °C | 13,2 g/s | 0,0441 % | 22 mg/Nm³ | 288 kg

BEF **AQUATIC WH V 100**

BImSchV
Stufe 2

15a
B - VG

ČSN EN
13229

eco design

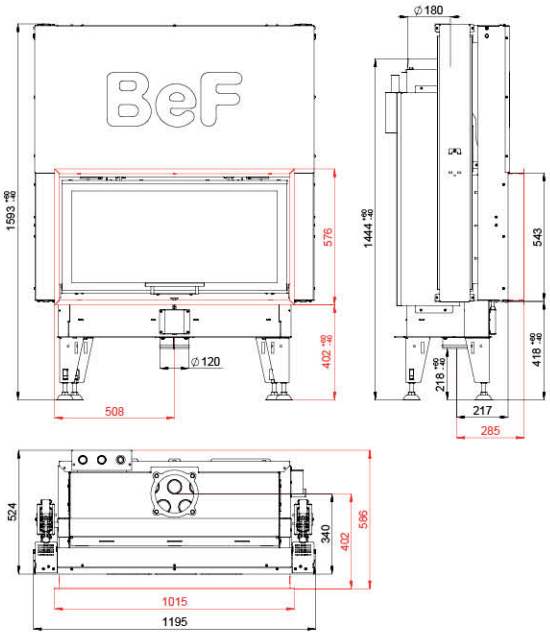

12 - 20 kW	8 - 13 kW	86 %	180 mm	660 mm	818 x 296 mm	950 x 468 mm

10 Pa	4 kg/h	211 °C	12 g/s	0,07 %	28 mg/Nm³	386 kg

BEF **AQUATIC WH 450**

BImSchV
Stufe 2

15a
B - VG

ČSN EN
13229

eco design

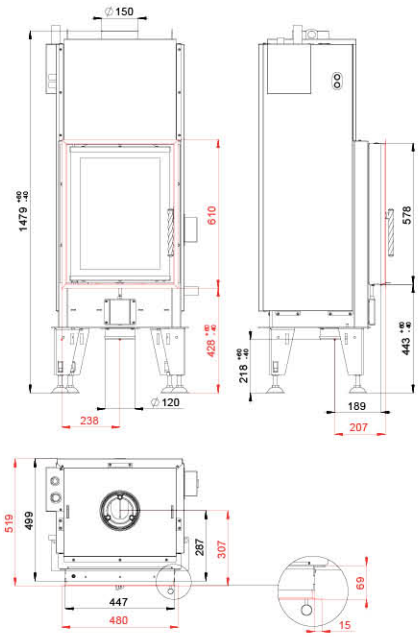

6 - 8,5 kW	4 - 6,5 kW	83 %	150 mm	250 mm	305 x 296 mm	405 x 535 mm

10 Pa	2,2 kg/h	230 °C	7,8 g/s	0,07 %	26 mg/Nm³	246 kg

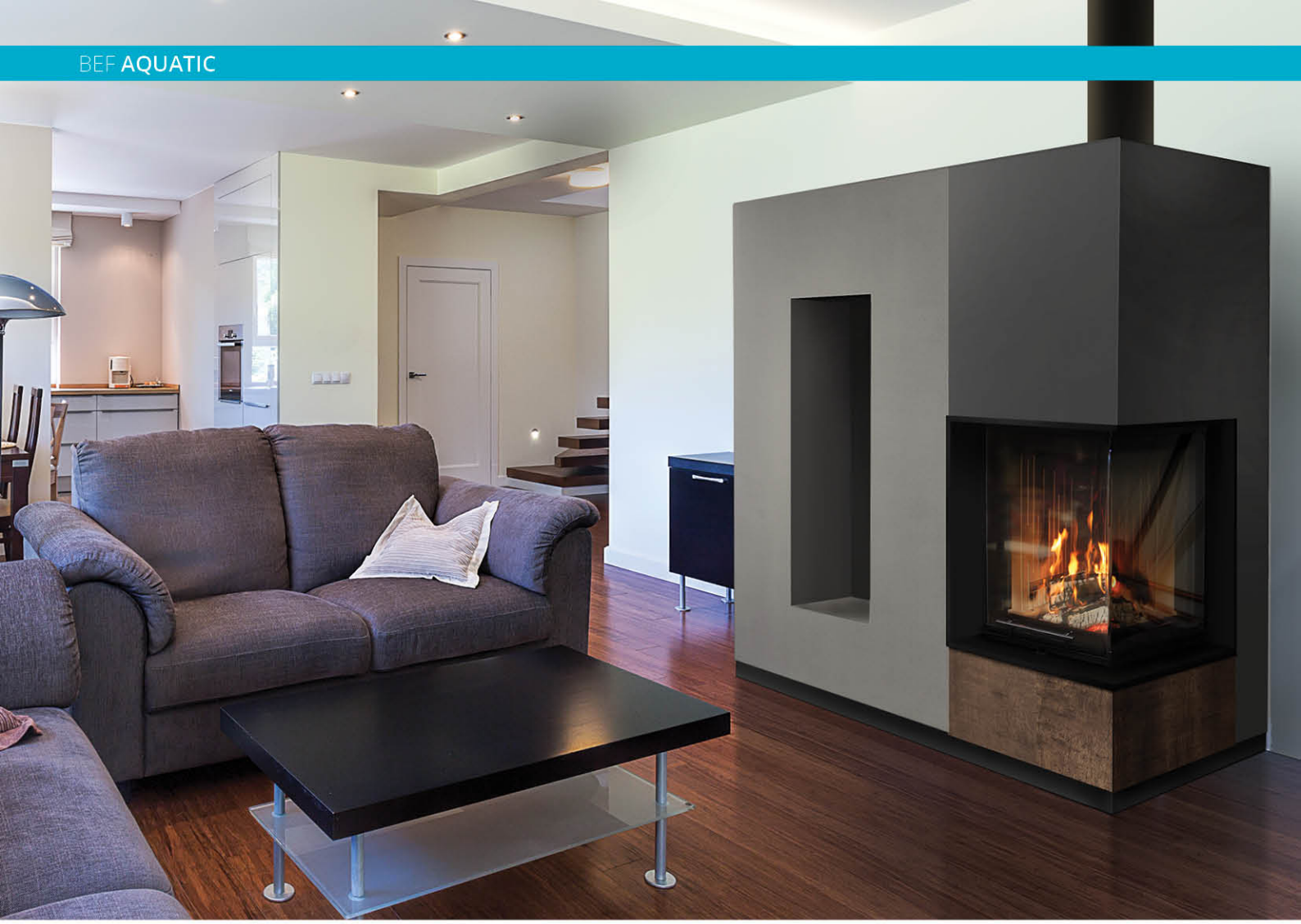

BEF **AQUATIC WH 450 E**

BImSchV
Stufe 2

15a
B - VG

ČSN EN
13229

eco design

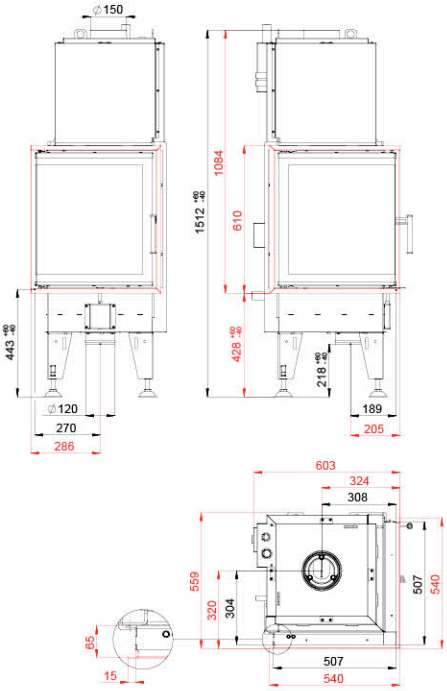

6 - 8,5 kW | 4 - 6,5 kW | 83 % | 150 mm | 330 mm | 330 x 330 mm | 480 x 480 x 532 mm

10 Pa | 2,2 kg/h | 230 °C | 7,8 g/s | 0,07 % | 26 mg/Nm³ | 232 kg

BEF **AQUATIC WH V 450**

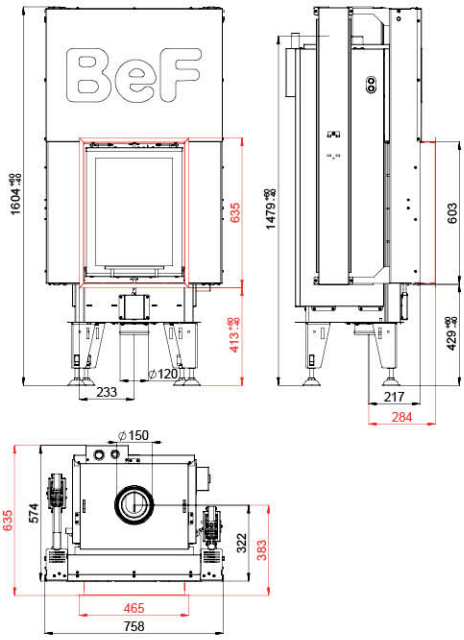

BImSchV Stufe 2

15a B - VG

ČSN EN 13229

eco design

6 - 8,5 kW | 4 - 6,5 kW | 83 % | 150 mm | 250 mm | 305 x 296 mm | 2x 405 x 535 mm

10 Pa | 2,2 kg/h | 230 °C | 7,8 g/s | 0,07 % | 26 mg/Nm³ | 326 kg

BEF **AQUATIC WH V 450 E**

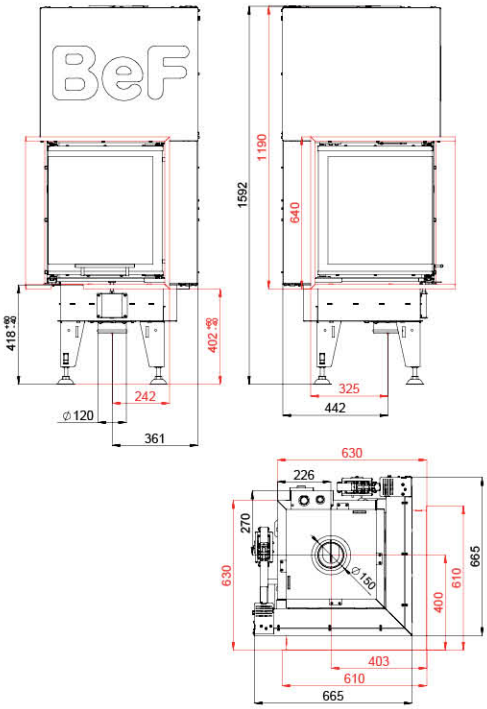

BImSchV Stufe 2

15a B - VG

ČSN EN 13229

eco design

6 - 8,5 kW | 4 - 6,5 kW | 83 % | 150 mm | 330 mm | 330 x 330 mm | 2x 480 x 480 x 532 mm

10 Pa | 2,2 kg/h | 230 °C | 7,8 g/s | 0,07 % | 26 mg/Nm³ | 325 kg

BEF **TWIN 8 AQUATIC II.**

BImSchV
Stufe 2

15a
B - VG

ČSN EN
13229

eco design

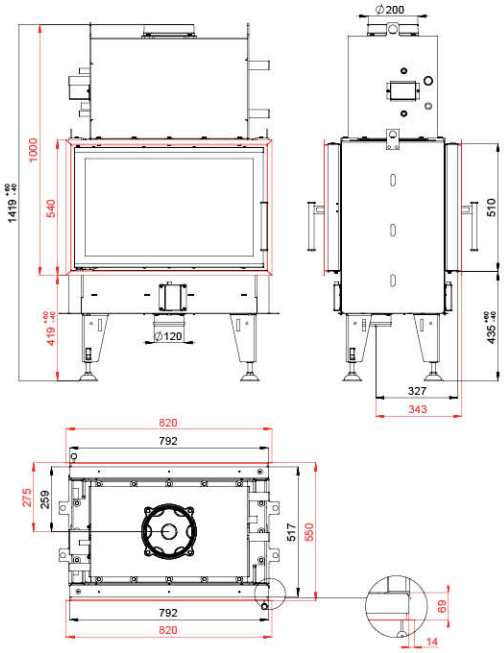

10 - 16 kW	3 - 5,5 kW	84 %	200 mm	500 mm	615 x 301 mm	2x 750 x 468 mm 750 x 468 mm

12 Pa	4,08 kg/h	213 °C	12,4 g/s	0,0624 %	37 mg/Nm³	255 kg

BEF **TWIN 8 N AQUATIC II.**

BImSchV
Stufe 2

15a
B - VG

ČSN EN
13229

eco design

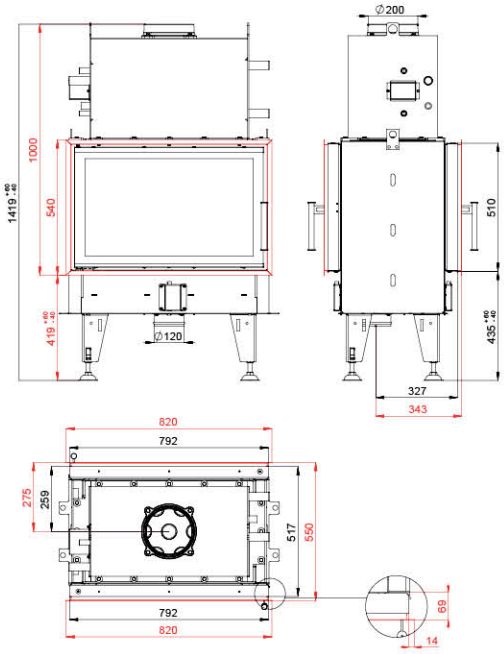

10 - 16 kW	3 - 5,5 kW	84 %	200 mm	500 mm	615 x 301 mm	2x 750 x 468 mm

12 Pa	4,08 kg/h	213 °C	12,4 g/s	0,0624 %	37 mg/Nm³	258 kg

BEF **TWIN V 8 AQUATIC II.**

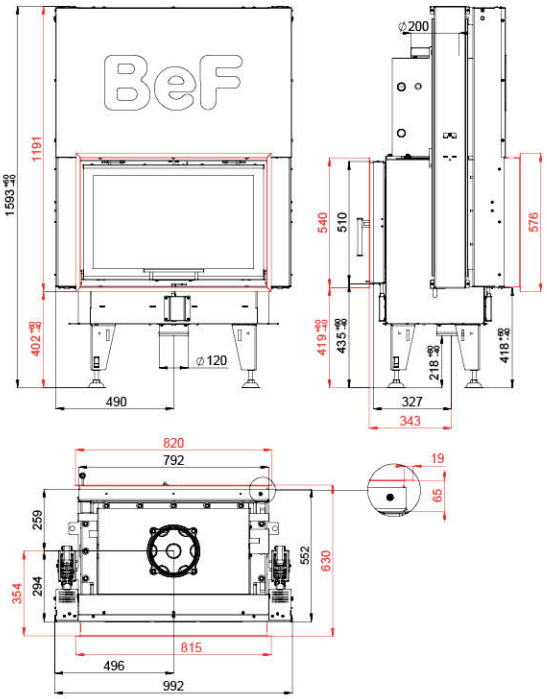

BImSchV Stufe 2

15a B - VG

ČSN EN 13229

eco design

10 - 16 kW | 3 - 5,5 kW | 84 % | 200 mm | 500 mm | 615 x 301 mm | 2x 750 x 468 mm 750 x 468 mm

12 Pa | 4,08 kg/h | 213 °C | 12,4 g/s | 0,0624 % | 37 mg/Nm³ | 319 kg

BEF **TWIN V 8 N AQUATIC II.**

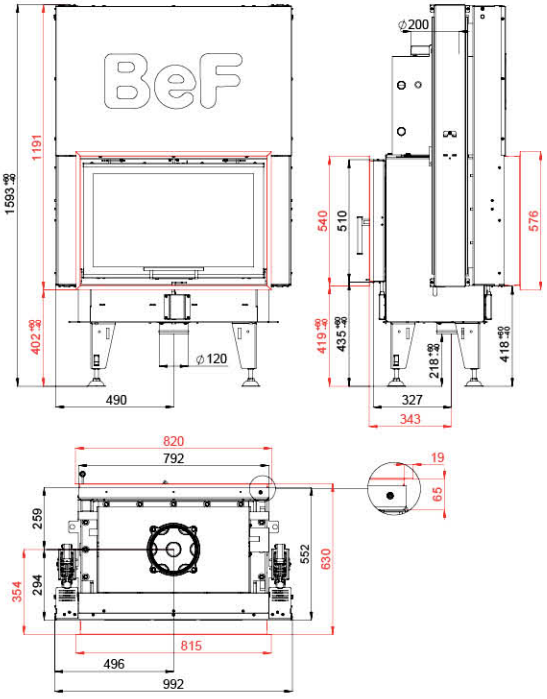

BImSchV Stufe 2

15a B - VG

ČSN EN 13229

eco design

10 - 16 kW | 3 - 5,5 kW | 84 % | 200 mm | 500 mm | 615 x 301 mm | 2x 750 x 468 mm

12 Pa | 4,08 kg/h | 213 °C | 12,4 g/s | 0,0624 % | 37 mg/Nm³ | 323 kg

BEF **TWIN 10 AQUATIC II.**

BImSchV
Stufe 2

15a
B - VG

ČSN EN
13229

eco design

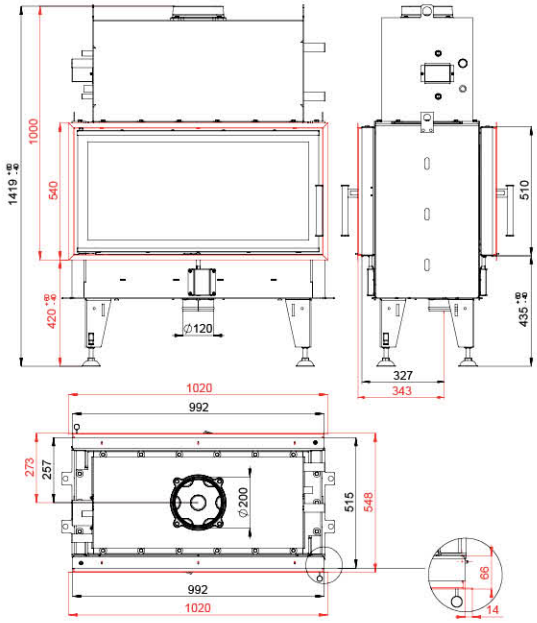

16 - 24 kW | 5 - 8,5 kW | 85 % | 200 mm | 500 mm | 615 x 301 mm | 2x 950 x 468 mm 950 x 468 mm

10 Pa | 6,06 kg/h | 204 °C | 16,9 g/s | 0,065 % | 26 mg/Nm³ | 297 kg

BEF **TWIN 10 N AQUATIC II.**

BImSchV
Stufe 2

15a
B - VG

ČSN EN
13229

eco design

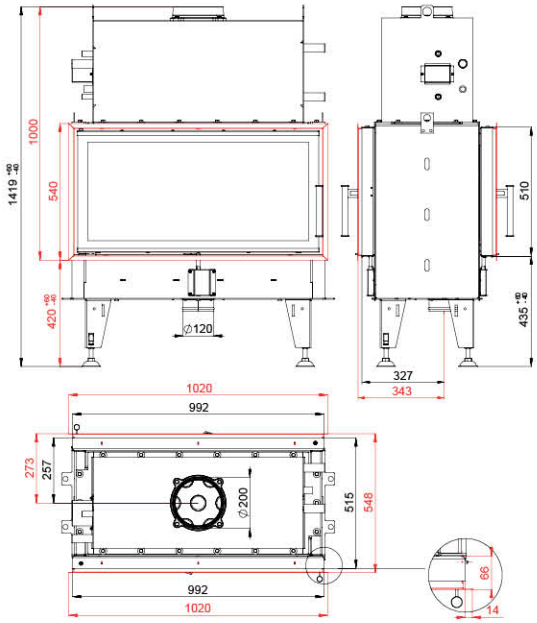

16 - 24 kW | 5 - 8,5 kW | 85 % | 200 mm | 500 mm | 615 x 301 mm | 2x 950 x 468 mm

10 Pa | 6,06 kg/h | 204 °C | 16,9 g/s | 0,065% | 26 mg/Nm³ | 302 kg

BEF **TWIN V 10 AQUATIC II.**

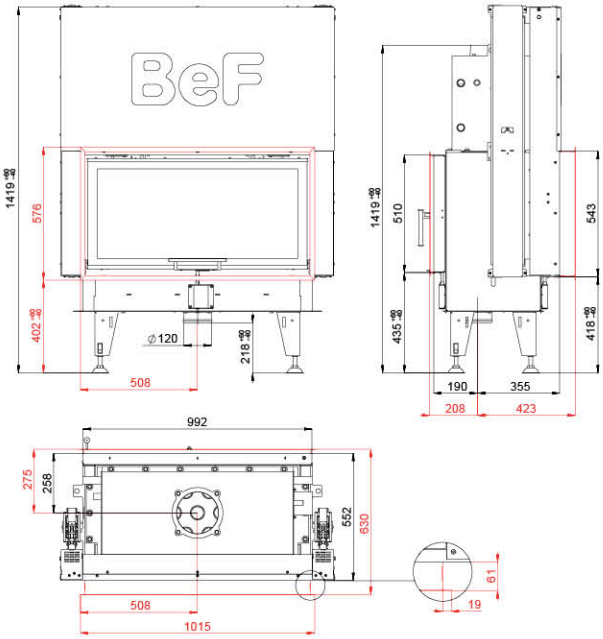

BImSchV Stufe 2

15a B - VG

ČSN EN 13229

eco design

16 - 24 kW | 5 - 8,5 kW | 85 % | 200 mm | 500 mm | 615 x 301 mm | 2x 950 x 468 mm 950 x 468 mm

10 Pa | 6,06 kg/h | 204 °C | 16,9 g/s | 0,065 % | 26 mg/Nm³ | 391 kg

BEF **TWIN V 10 N AQUATIC II.**

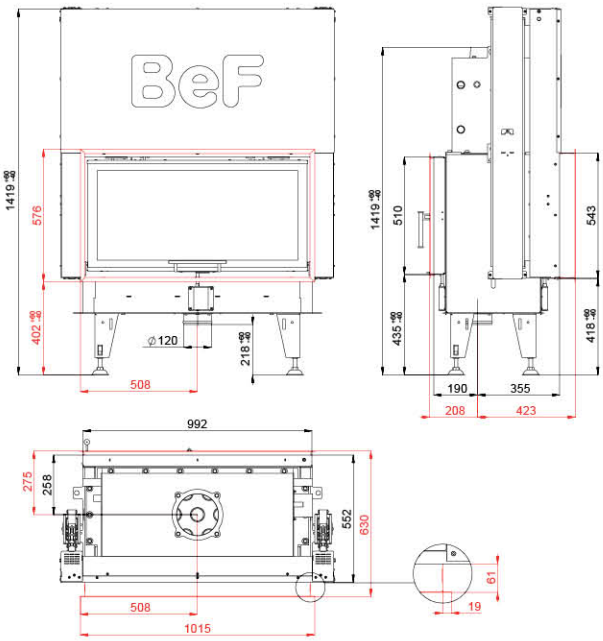

BImSchV Stufe 2

15a B - VG

ČSN EN 13229

eco design

16 - 24 kW | 5 - 8,5 kW | 85 % | 200 mm | 500 mm | 615 x 301 mm | 2x 950 x 468 mm

10 Pa | 6,06 kg/h | 204 °C | 16,9 g/s | 0,065 % | 26 mg/Nm³ | 396 kg

BEF **RUSTICAL**

16:9

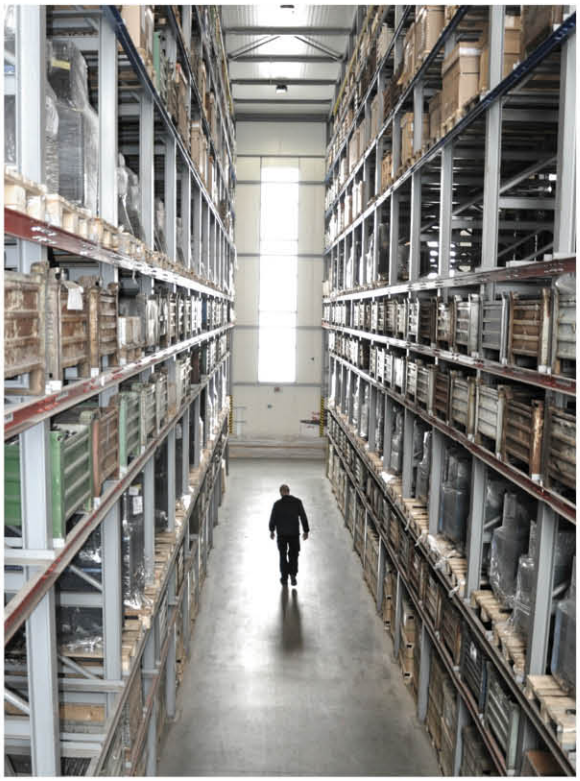

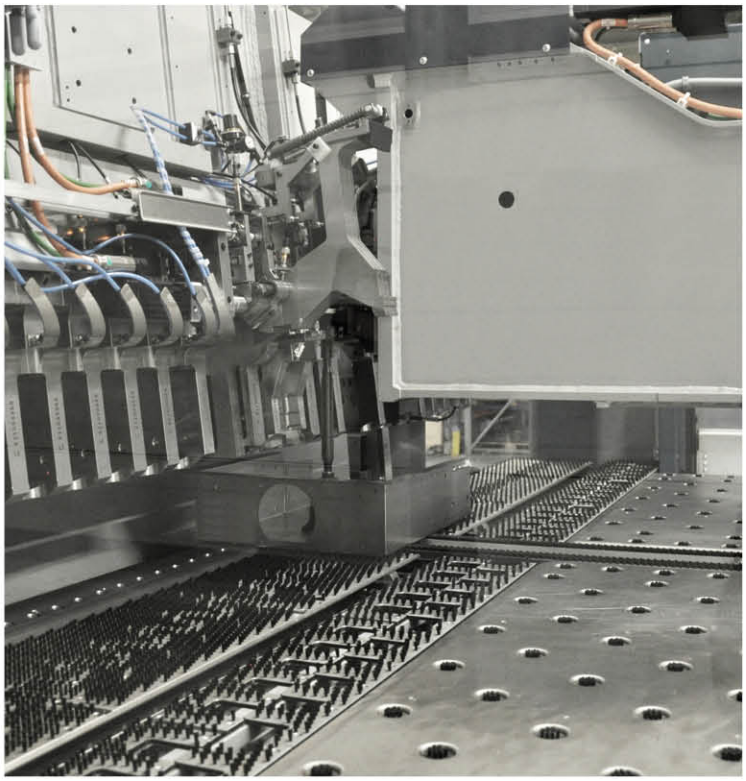

* These data are informative, the manufacturer reserves the right to change.

BEF HOME
fire for your heart

CATALOGUE OF PASSIVE FIREPLACE INSERTS

BEF HOME
fire for your heart

CZ | Kotvrdovice 277
679 07 Kotvrdovice
Czech Republic

tel.: +420 516 428 240
e-mail: info@bef.cz
IČ: 25 52 46 82
DIČ: CZ 25 52 46 82

SK | Turá Lúka 97
907 03 Myjava
Slovakia

tel.: +421 346 216 790
e-mail: info@bef.sk

PL | Bąków ul. Główna 4a
43-246 Strumień
Poland

tel.: +48 530 712 534
tel.: +48 530 712 624
e-mail: info@befpolska.pl

FR | 1 Place de l'Homme de Fer
67 000 Strasbourg
France

tél.: 00 33 672 383 113
e-mail: info@foyers-bef.fr

BEF **PASSIVE 6**

ČSN EN
13229

BLOWER DOOR
TEST

eco design

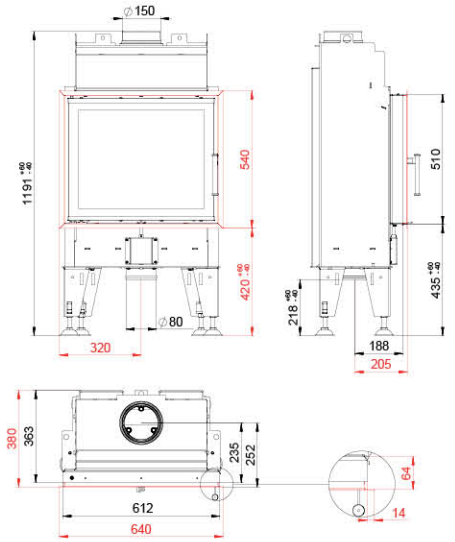

3 - 6 kW | 86 % | 150 mm | 330 mm | 400 x 218 mm | 570 x 468 mm (2x)

12 Pa | 1,15 kg/h | 193 °C | 3 g/s | 0,0814 % | 16 mg/Nm³ | 116 kg

BEF **PASSIVE 6 CL/CP**

ČSN EN
13229

BLOWER DOOR
TEST

eco design

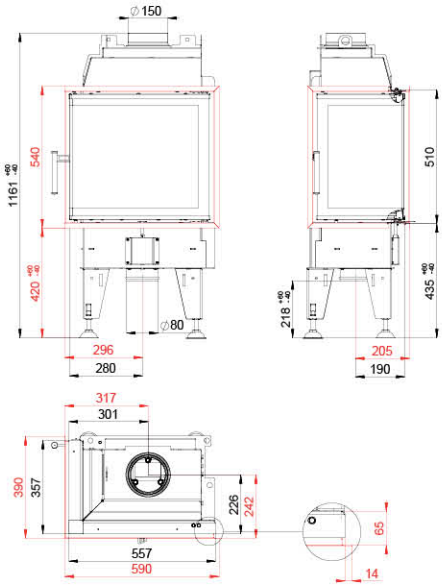

3 - 6 kW | 86 % | 150 mm | 250 mm | 370 x 211 mm | 530 x 330 x 468 mm (2x)

12 Pa | 1,15 kg/h | 193 °C | 3 g/s | 0,0814 % | 16 mg/Nm³ | 112 kg

BEF **PASSIVE V 6**

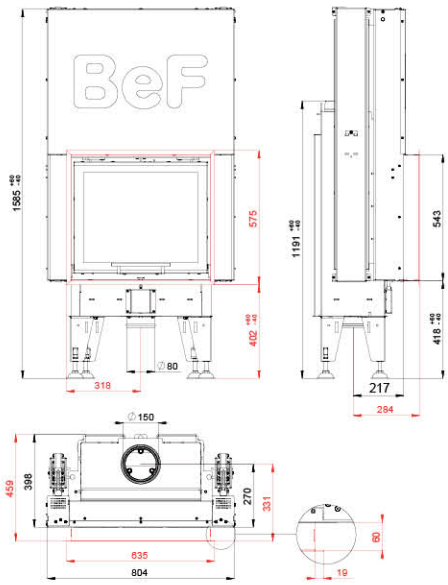

ČSN EN 13229

BLOWER DOOR TEST

eco design

3 - 6 kW | 86 % | 150 mm | 330 mm | 400 x 218 mm | 570 x 468 mm (2x)

12 Pa | 1,15 kg/h | 193 °C | 3 g/s | 0,0814 % | 16 mg/Nm³ | 213 kg

BEF **PASSIVE 7**

ČSN EN
13229

BLOWER DOOR
TEST

eco design

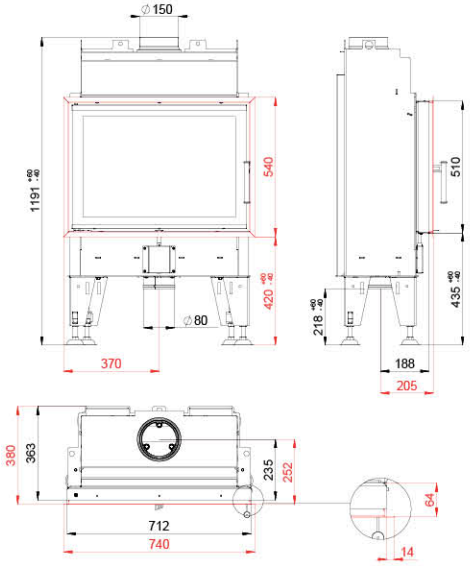

4 - 7 kW | 84 % | 150 mm | 400 mm | 494 x 218 mm | 670 x 468 mm

12 Pa | 1,48 kg/h | 201 °C | 4,2 g/s | 0,0893 % | 16 mg/Nm³ | 141 kg

BEF **PASSIVE 7 CL/CP**

ČSN EN
13229

BLOWER DOOR
TEST

eco design

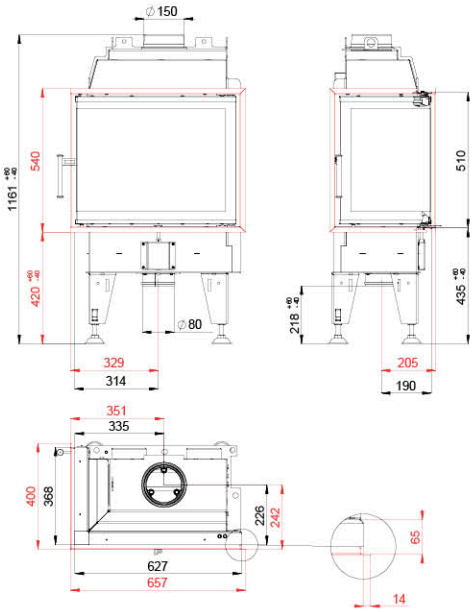

4 - 7 kW | 84 % | 150 mm | 330 mm | 440 x 211 mm | 600 x 340 x 468 mm

12 Pa | 1,48 kg/h | 201 °C | 4,2 g/s | 0,0893 % | 16 mg/Nm³ | 123 kg

BEF **PASSIVE V 7**

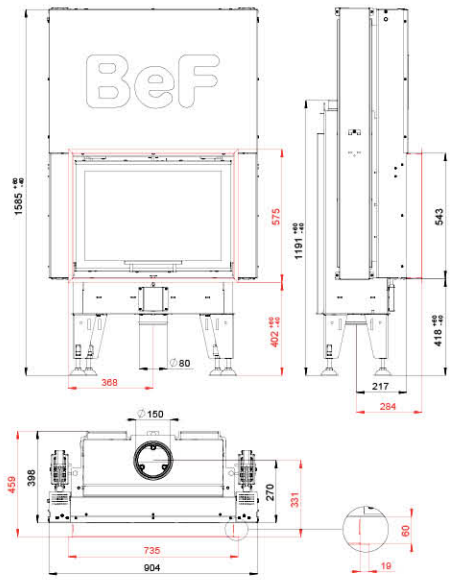

ČSN EN 13229

BLOWER DOOR TEST

eco design

4 - 7 kW	84 %	150 mm	400 mm	494 x 218 mm	670 x 468 mm	
12 Pa	1,48 kg/h	201 °C	4,2 g/s	0,0893 %	16 mg/Nm³	233 kg

BEF **PASSIVE 8**

ČSN EN
13229

BLOWER DOOR
TEST

eco design

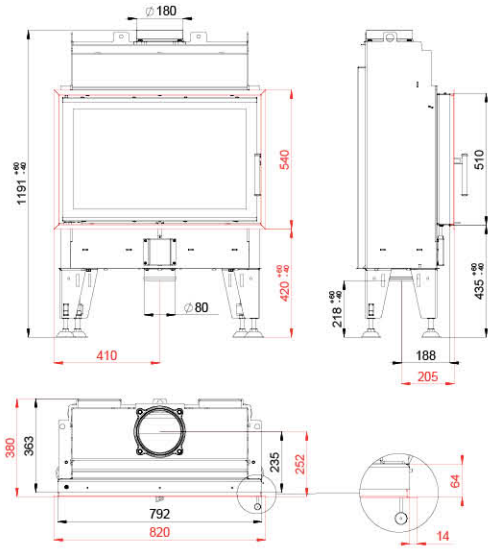

5 - 8 kW | 84 % | 180 mm | 500 mm | 568 x 218 mm | 2x 750 x 468 mm

12 Pa | 1,84 kg/h | 215 °C | 4,9 g/s | 0,0943 % | 18 mg/Nm³ | 144 kg

BEF **PASSIVE 8 CL/CP**

ČSN EN
13229

BLOWER DOOR
TEST

eco design

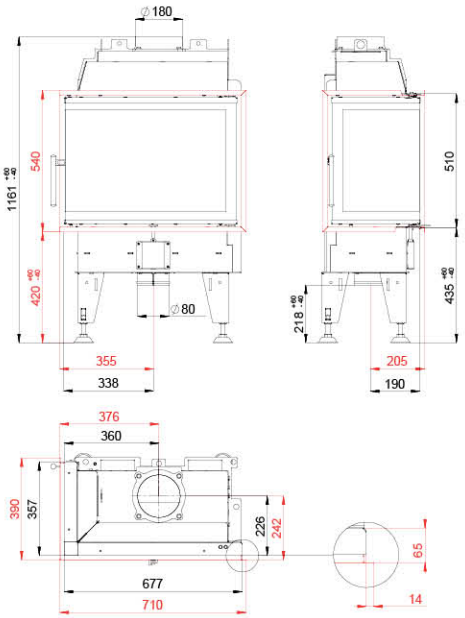

5 - 8 kW | 84 % | 180 mm | 400 mm | 490 x 211 mm | 2x 650 x 330 x 468 mm

12 Pa | 1,84 kg/h | 215 °C | 4,9 g/s | 0,0943 % | 18 mg/Nm³ | 128 kg

BEF **PASSIVE V 8**

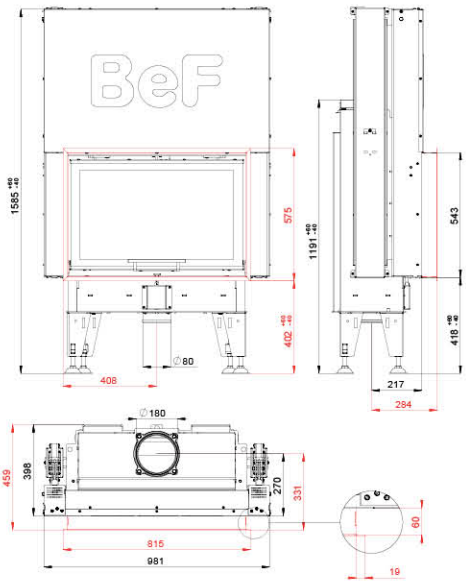

ČSN EN 13229

BLOWER DOOR TEST

eco design

5 - 8 kW	84 %	180 mm	500 mm	568 x 218 mm	750 x 468 mm	
12 Pa	1,84 kg/h	215 °C	4,9 g/s	0,0943 %	18 mg/Nm³	250 kg

BEF **THERM 6 PASSIVE**

ČSN EN
13229

BLOWER DOOR
TEST

eco design

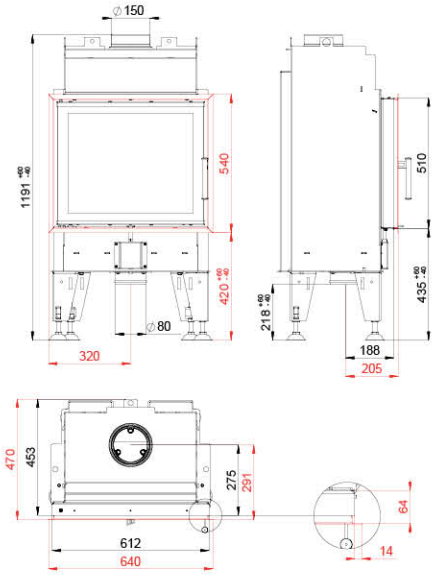

4 - 7 kW | 82 % | 150 mm | 330 mm | 435 x 295 mm | 2x 570 x 468 mm

12 Pa | 1,85 kg/h | 262 °C | 4,6 g/s | 0,0873 % | 19 mg/Nm³ | 152 kg

BEF **THERM 6 CL/CP PASSIVE**

ČSN EN
13229

BLOWER DOOR
TEST

eco design

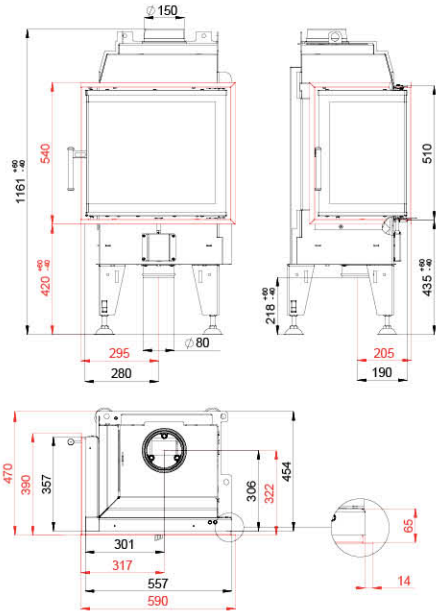

4 - 7 kW | 82 % | 150 mm | 330 mm | 395 x 295 mm | 2x 530 x 330 x 468 mm

12 Pa | 1,85 kg/h | 262 °C | 4,6 g/s | 0,0873 % | 19 mg/Nm³ | 131 kg

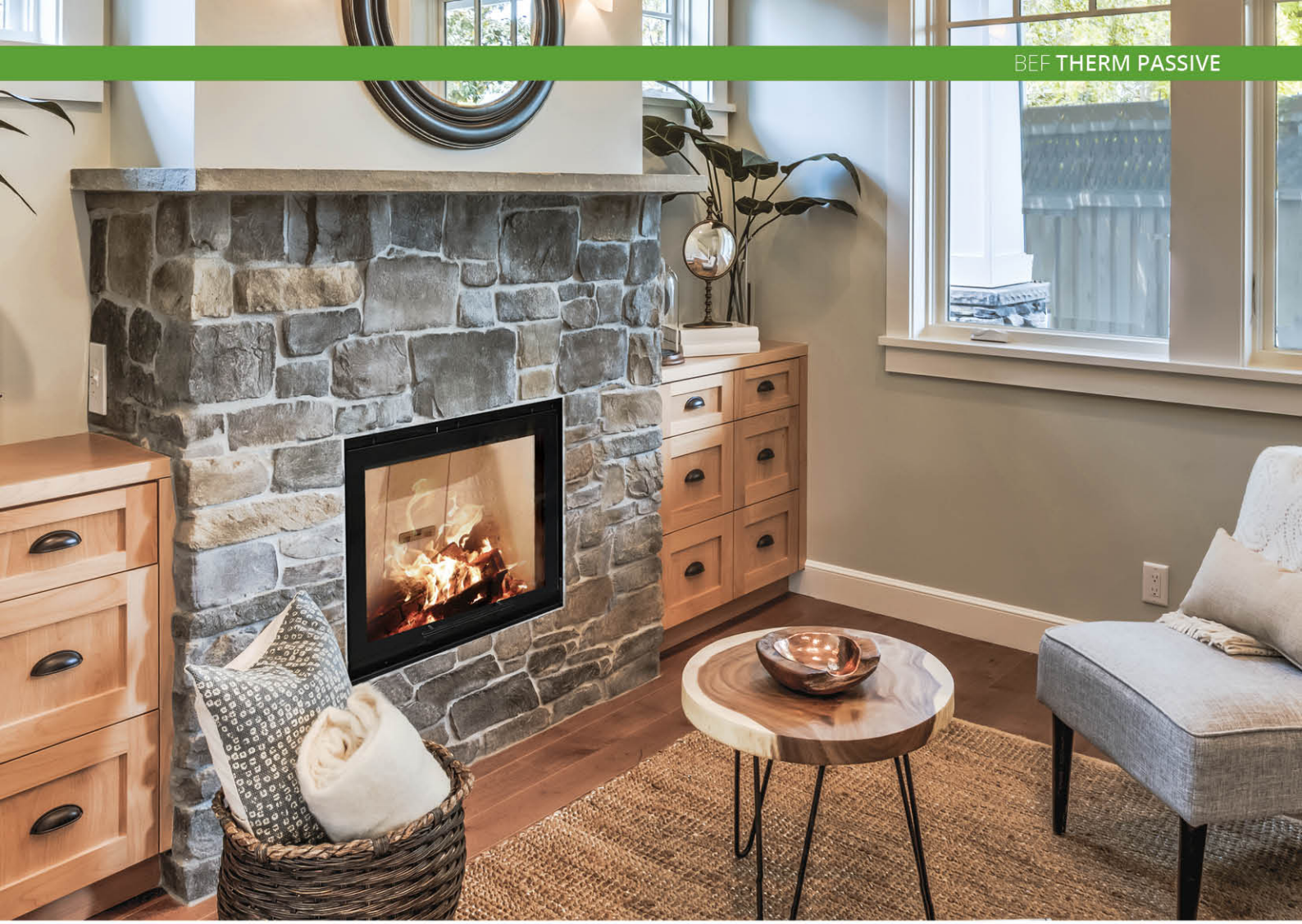

BEF **THERM PASSIVE V 6**

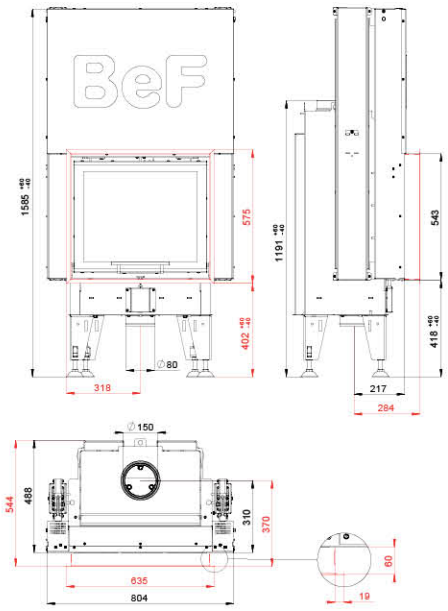

ČSN EN 13229

BLOWER DOOR TEST

eco design

4 - 7 kW	82 %	150 mm	330 mm	435 x 295 mm	570 x 468 mm	
12 Pa	1,85 kg/h	262 °C	4,6 g/s	0,0873 %	19 mg/Nm³	234 kg

BEF **THERM 7 PASSIVE**

ČSN EN
13229

BLOWER DOOR
TEST

eco design

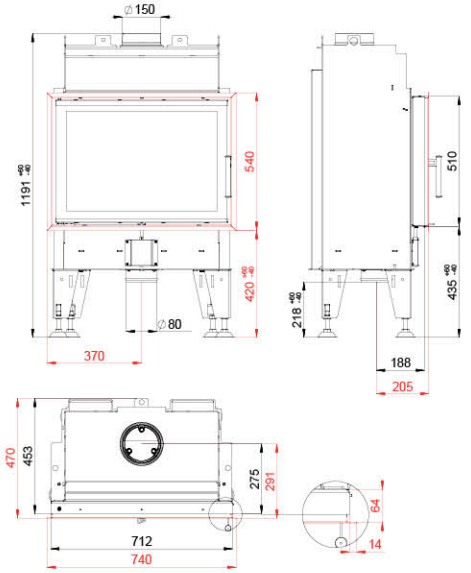

5 - 8 kW | 82 % | 150 mm | 400 mm | 520 x 295 mm | 670 x 468 mm

12 Pa | 2,05 kg/h | 264 °C | 5,6 g/s | 0,0868 % | 19 mg/Nm³ | 174 kg

BEF **THERM 7 CL/CP PASSIVE**

ČSN EN
13229

BLOWER DOOR
TEST

eco design

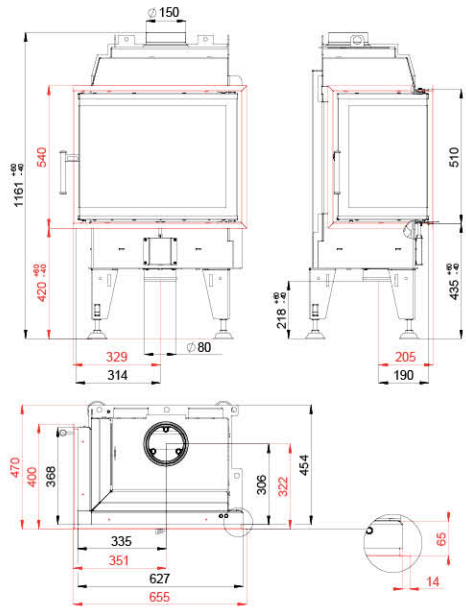

5 - 8 kW | 82 % | 150 mm | 330 mm | 465 x 295 mm | 600 x 340 x 468 mm

12 Pa | 2,05 kg/h | 264 °C | 5,6 g/s | 0,0868 % | 19 mg/Nm³ | 146 kg

BEF **THERM PASSIVE V 7**

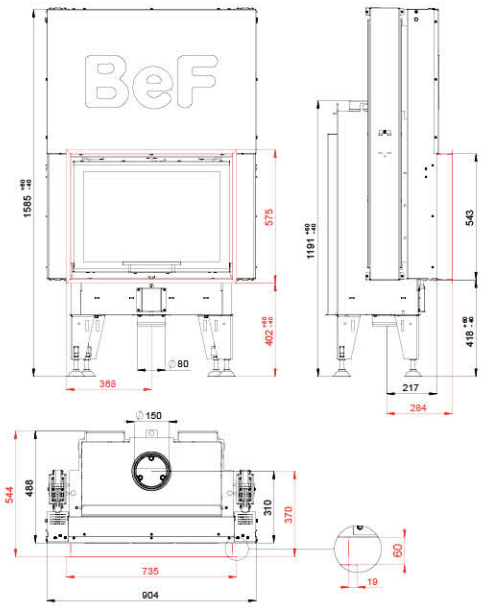

ČSN EN 13229

BLOWER DOOR TEST

eco design

5 - 8 kW	82 %	150 mm	400 mm	520 x 295 mm	670 x 468 mm

12 Pa	2,05 kg/h	264 °C	5,6 g/s	0,0868 %	19 mg/Nm³	256 kg

BEF **THERM 8 PASSIVE**

ČSN EN
13229

BLOWER DOOR
TEST

eco design

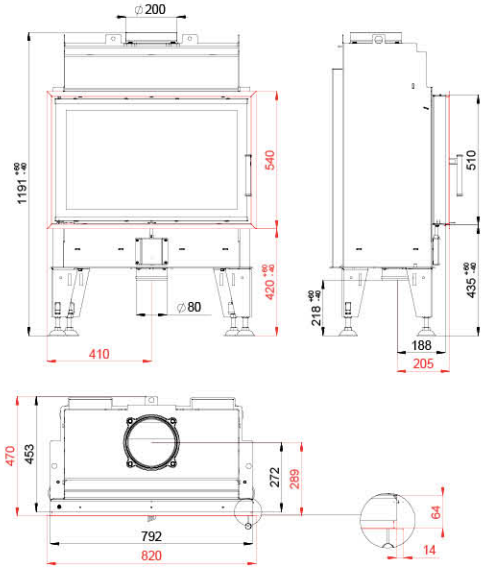

7 - 10 kW | 84 % | 200 mm | 500 mm | 600 x 295 mm | 750 x 468 mm

12 Pa | 2,7 kg/h | 257 °C | 6 g/s | 0,0868 % | 18 mg/Nm³ | 189 kg

BEF **THERM 8 CL/CP PASSIVE**

ČSN EN
13229

BLOWER DOOR
TEST

eco design

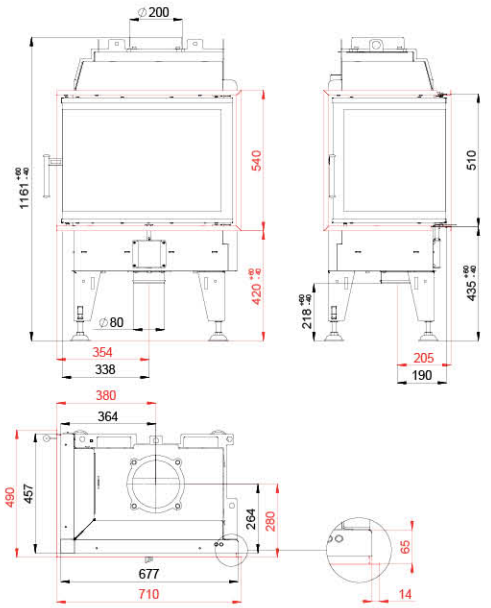

7 - 10 kW | 84 % | 200 mm | 400 mm | 515 x 295 mm | 650 x 430 x 468 mm

12 Pa | 2,7 kg/h | 257 °C | 6 g/s | 0,0868 % | 18 mg/Nm³ | 157 kg

BEF **THERM PASSIVE V 8**

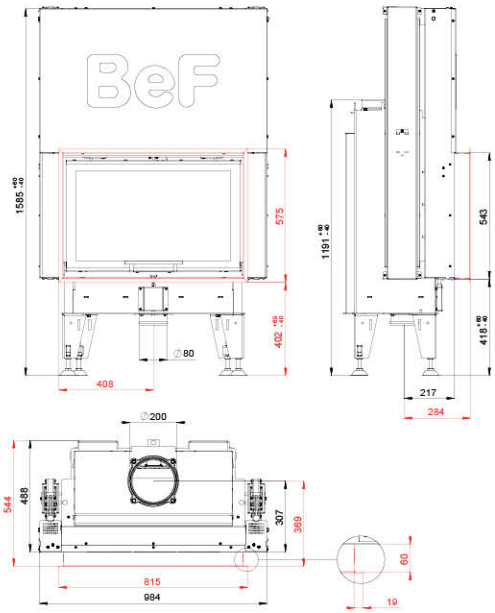

ČSN EN 13229

BLOWER DOOR TEST

eco design

7 - 10 kW	84 %	200 mm	500 mm	600 x 295 mm	750 x 468 mm	
12 Pa	2,7 kg/h	257 °C	6 g/s	0,0868 %	18 mg/Nm³	275 kg

BEF **DOUBLE 6 FEEL PASSIVE**

ČSN EN
13229

BLOWER DOOR
TEST

eco design

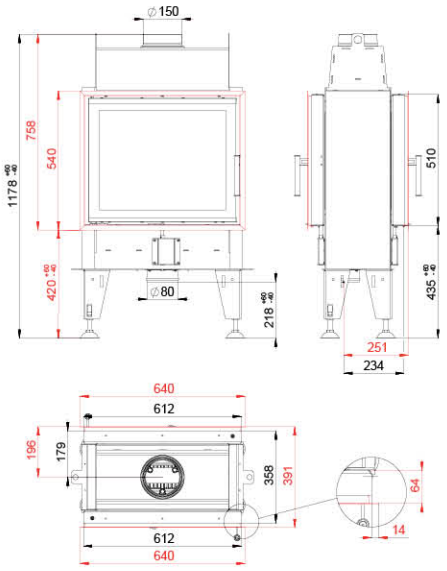

3 - 6 kW | 84 % | 150 mm | 330 mm | 416 x 210 mm | 2x 570 x 468 mm 570 x 468 mm

12 Pa | 1,53 kg/h | 206 °C | 4,3 g/s | 0,0946 % | 17 mg/Nm³ | 120 kg

BEF **DOUBLE 6 N FEEL PASSIVE**

ČSN EN
13229

BLOWER DOOR
TEST

eco design

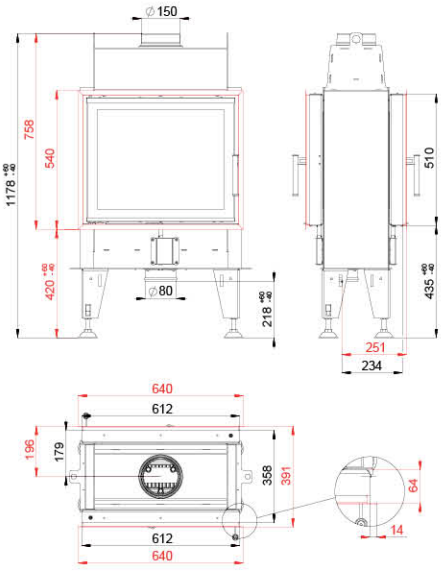

3 - 6 kW | 84 % | 150 mm | 330 mm | 416 x 210 mm | 2x 570 x 468 mm

12 Pa | 1,53 kg/h | 206 °C | 4,3 g/s | 0,0946 % | 17 mg/Nm³ | 126 kg

BEF **DOUBLE V 6 FEEL PASSIVE**

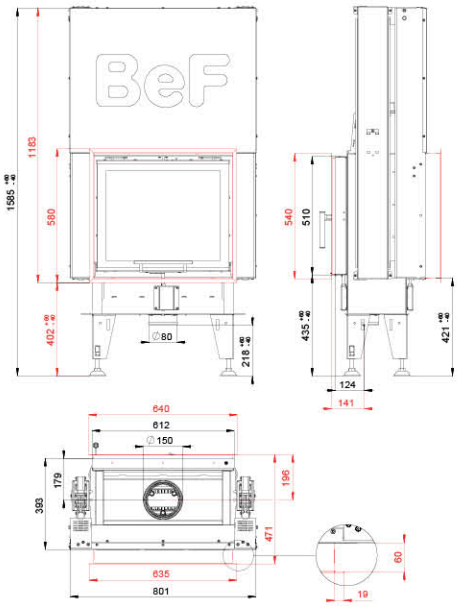

ČSN EN 13229

BLOWER DOOR TEST

eco design

3 - 6 kW | 84 % | 150 mm | 330 mm | 416 x 210 mm | 2x 570 x 468 mm 570 x 468 mm

12 Pa | 1,53 kg/h | 206 °C | 4,3 g/s | 0,0946 % | 17 mg/Nm³ | 204 kg

BEF **DOUBLE V 6 N FEEL PASSIVE**

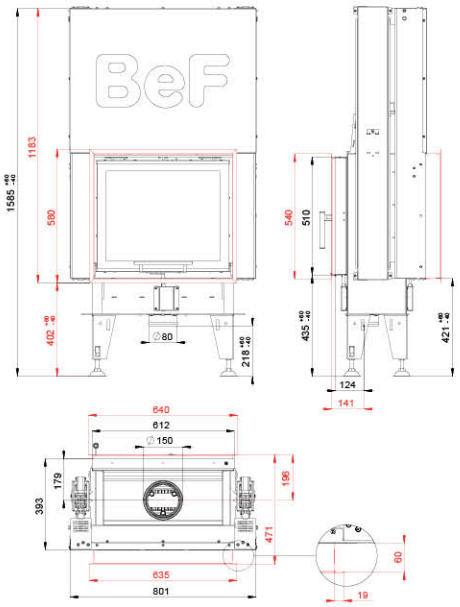

ČSN EN 13229

BLOWER DOOR TEST

eco design

3 - 6 kW | 84 % | 150 mm | 330 mm | 416 x 210 mm | 2x 570 x 468 mm

12 Pa | 1,53 kg/h | 206 °C | 4,3 g/s | 0,0946 % | 17 mg/Nm³ | 201 kg

BEF **DOUBLE 7 FEEL PASSIVE**

ČSN EN
13229

BLOWER DOOR
TEST

eco design

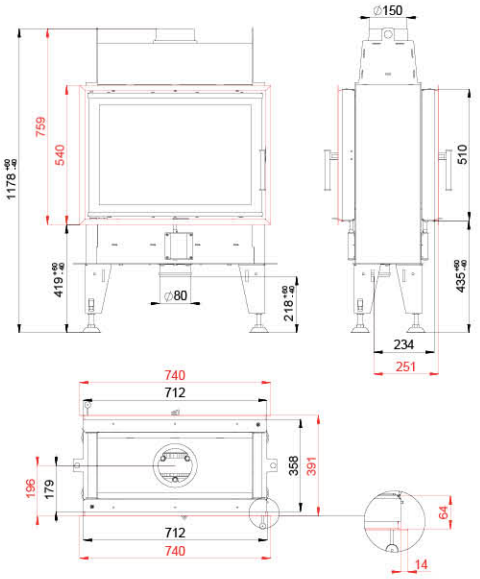

4 - 7 kW	82 %	150 mm	400 mm	504 x 210 mm	2x 670 x 468 mm 670 x 468 mm

12 Pa	2,47 kg/h	232 °C	6,5 g/s	0,0811 %	18 mg/Nm³	133 kg

BEF **DOUBLE 7 N FEEL PASSIVE**

ČSN EN
13229

BLOWER DOOR
TEST

eco design

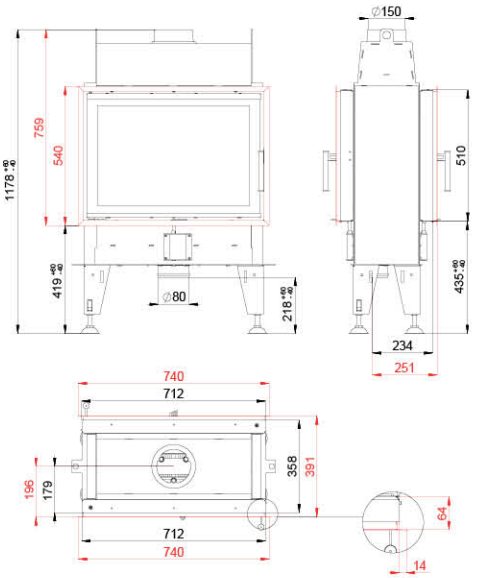

4 - 7 kW	82 %	150 mm	400 mm	504 x 210 mm	2x 670 x 468 mm

12 Pa	2,47 kg/h	232 °C	6,5 g/s	0,0811 %	18 mg/Nm³	134 kg

BEF **DOUBLE V 7 FEEL PASSIVE**

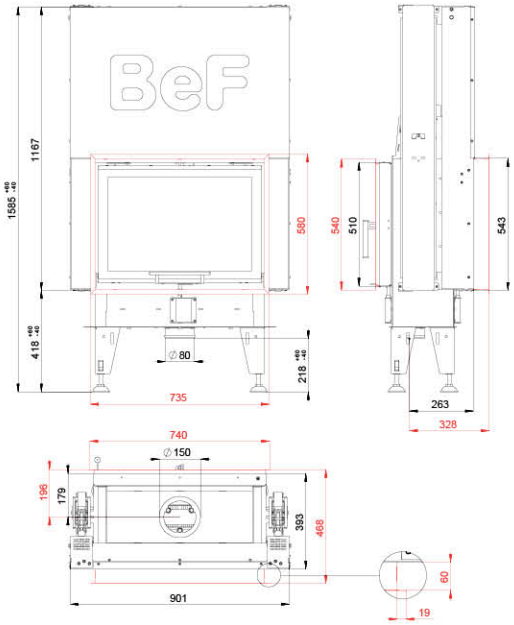

ČSN EN 13229

BLOWER DOOR TEST

eco design

4 - 7 kW | 82 % | 150 mm | 400 mm | 504 x 210 mm | 2x 670 x 468 mm 670 x 468 mm

12 Pa | 2,47 kg/h | 232 °C | 6,5 g/s | 0,0811 % | 18 mg/Nm³ | 220 kg

BEF **DOUBLE V 7 N FEEL PASSIVE**

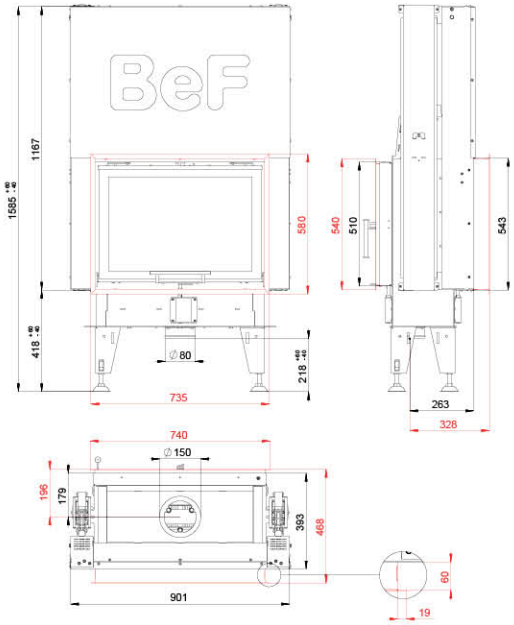

ČSN EN 13229

BLOWER DOOR TEST

eco design

4 - 7 kW | 82 % | 150 mm | 400 mm | 504 x 210 mm | 2x 670 x 468 mm

12 Pa | 2,47 kg/h | 232 °C | 6,5 g/s | 0,0811 % | 18 mg/Nm³ | 211 kg

BEF **TWIN 8 II. PASSIVE**

ČSN EN
13229

BLOWER DOOR
TEST

eco design

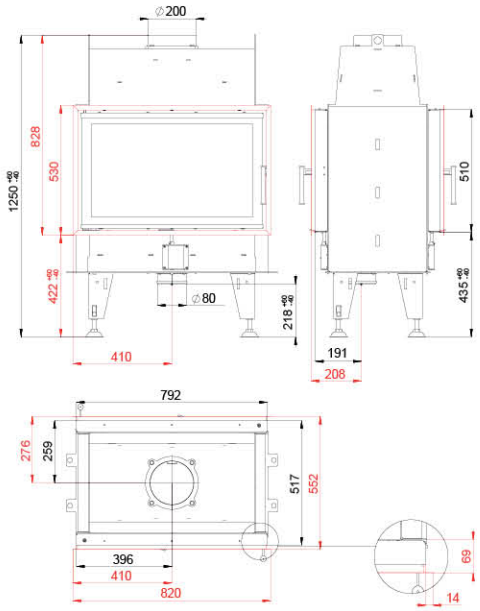

5 - 11 kW | 80 % | 200 mm | 500 mm | 615 x 320 mm | 2x 750 x 468 mm 750 x 468 mm

12 Pa | 2,75 kg/h | 240 °C | 9,3 g/s | 0,0993 % | 30 mg/Nm³ | 207 kg

BEF **TWIN 8 N II. PASSIVE**

ČSN EN
13229

BLOWER DOOR
TEST

eco design

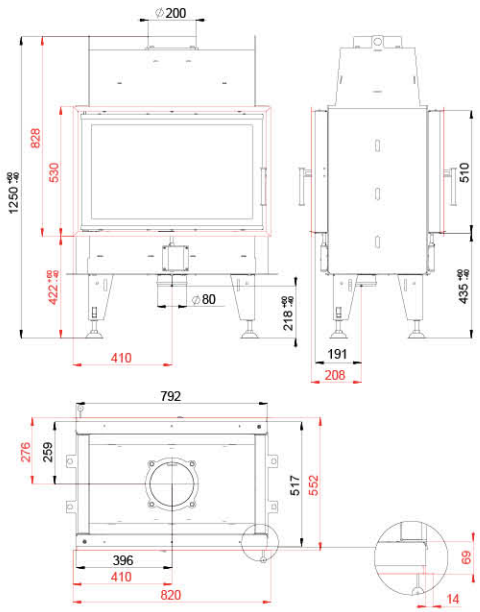

5 - 11 kW | 80 % | 200 mm | 500 mm | 615 x 320 mm | 750 x 468 mm

12 Pa | 2,75 kg/h | 240 °C | 9,3 g/s | 0,0993 % | 30 mg/Nm³ | 203 kg

BEF **TWIN V 8 II. PASSIVE**

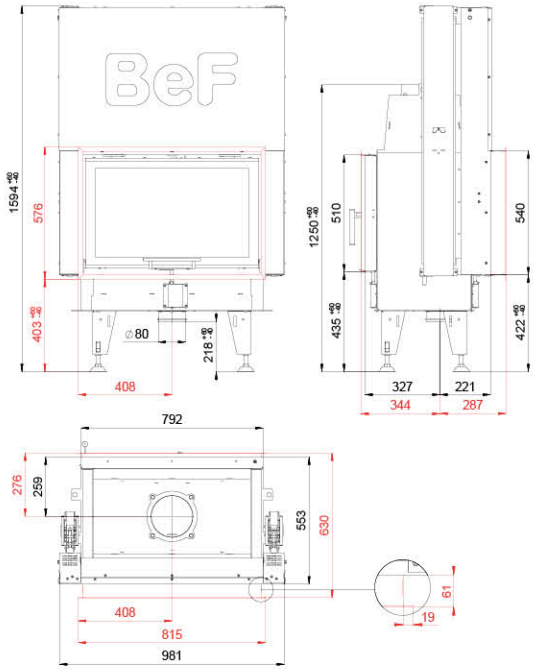

ČSN EN 13229

BLOWER DOOR TEST

eco design

5 - 11 kW | 80 % | 200 mm | 500 mm | 615 x 320 mm | 2x 750 x 468 mm 750 x 468 mm

12 Pa | 2,75 kg/h | 240 °C | 9,3 g/s | 0,0993 % | 30 mg/Nm³ | 286 kg

BEF **TWIN V 8 N II. PASSIVE**

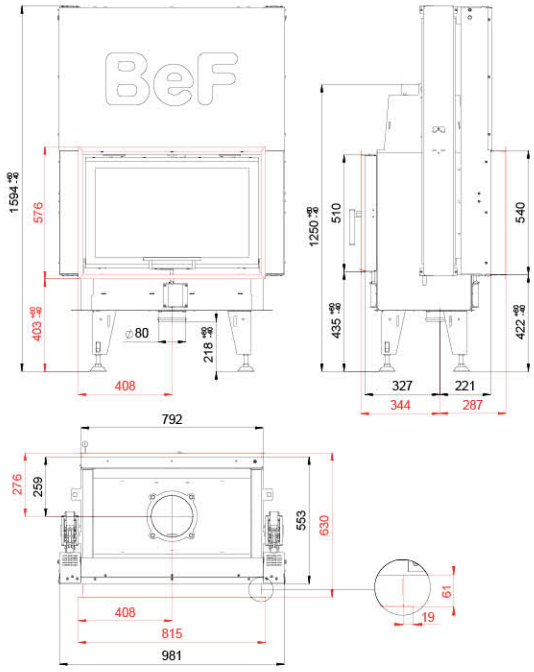

ČSN EN 13229

BLOWER DOOR TEST

eco design

5 - 11 kW | 80 % | 200 mm | 500 mm | 615 x 320 mm | 2x 750 x 468 mm

12 Pa | 2,75 kg/h | 240 °C | 9,3 g/s | 0,0993 % | 30 mg/Nm³ | 285 kg

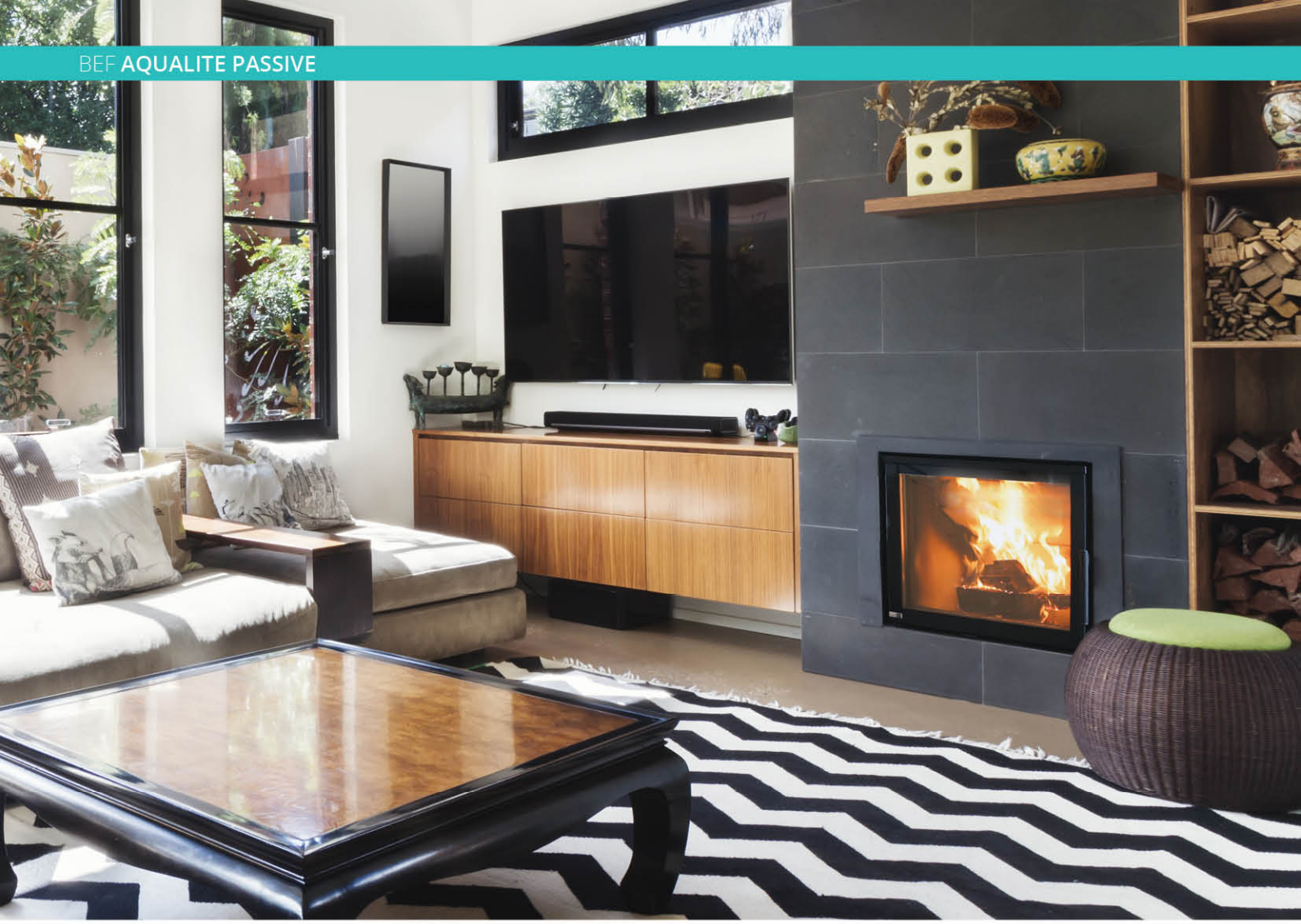

BEF **AQUALITE 6 PASSIVE**

ČSN EN
13229

BLOWER DOOR
TEST

eco design

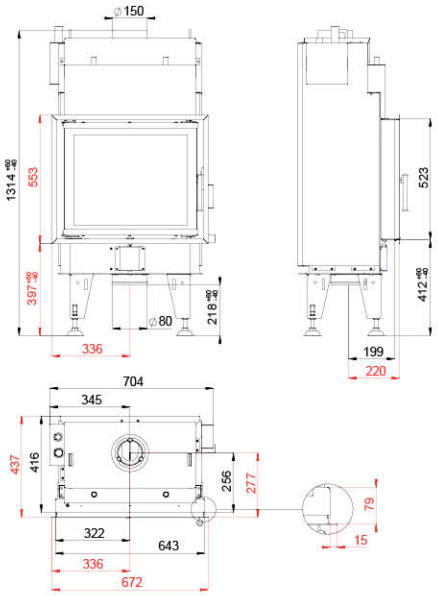

5 - 10 kW | 3,5 - 8 kW | 87 % | 150 mm | 400 mm | 445 x 225 mm | 2x 570 x 468 mm + 1x 510 x 400 mm

11 Pa | 2,22 kg/h | 178 °C | 6,5 g/s | 0,0840 % | 18 mg/Nm³ | 230 kg

BEF **TWIN 8 AQUATIC II. PASSIVE**

ČSN EN 13229

BLOWER DOOR TEST

eco design

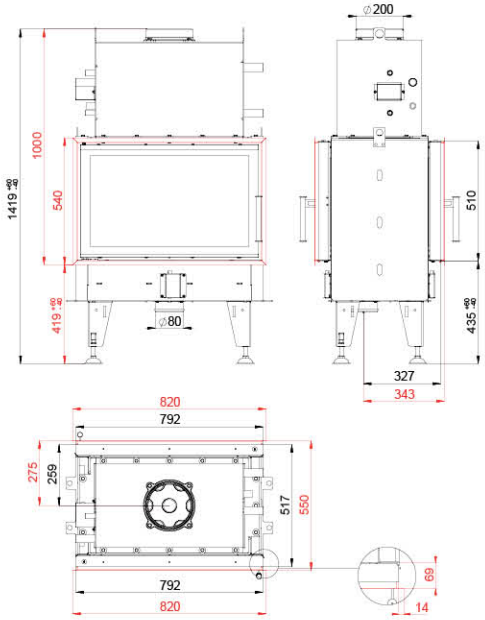

10 - 16 kW	3 - 5,5 kW	84 %	200 mm	500 mm	615 x 301 mm	2x 750 x 468 mm 750 x 468 mm

12 Pa	4,08 kg/h	213 °C	12,4 g/s	0,0624 %	37 mg/Nm³	265 kg

BEF **TWIN 8 N AQUATIC II. PASSIVE**

ČSN EN 13229

BLOWER DOOR TEST

eco design

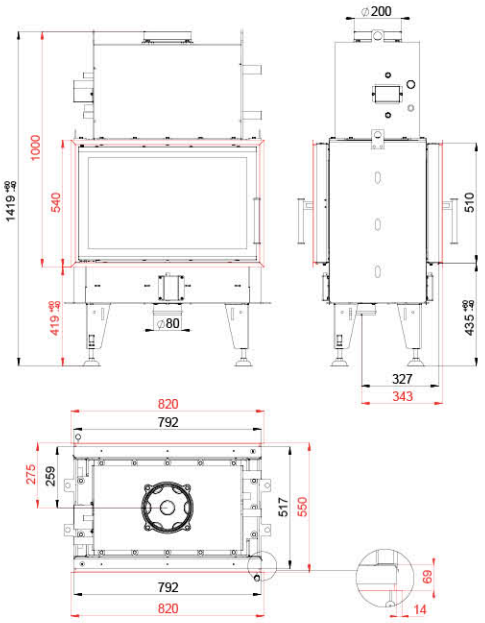

10 - 16 kW	3 - 5,5 kW	84 %	200 mm	500 mm	615 x 301 mm	2x 750 x 468 mm

12 Pa	4,08 kg/h	213 °C	12,4 g/s	0,0624 %	37 mg/Nm³	263 kg

BEF **TWIN V 8 AQUATIC II. PASSIVE**

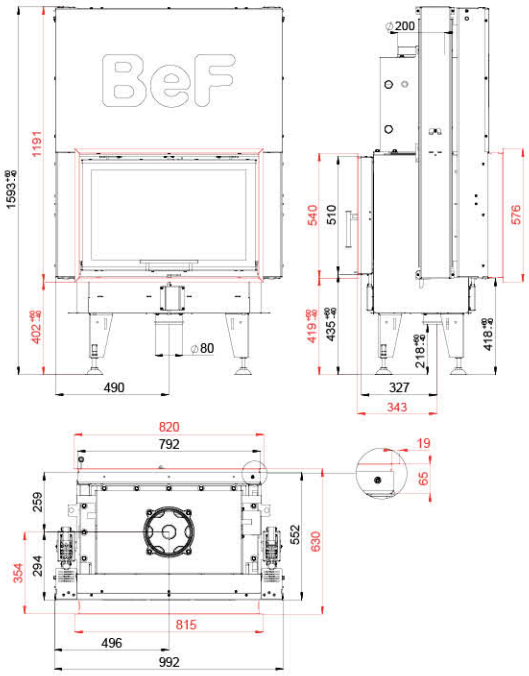

ČSN EN 13229

BLOWER DOOR TEST

eco design

10 - 16 kW | 3 - 5,5 kW | 84 % | 200 mm | 500 mm | 615 x 301 mm | 750 x 468 mm, 750 x 468 mm

12 Pa | 4,08 kg/h | 213 °C | 12,4 g/s | 0,0624 % | 37 mg/Nm³ | 329 kg

BEF **TWIN V 8 N AQUATIC II. PASSIVE**

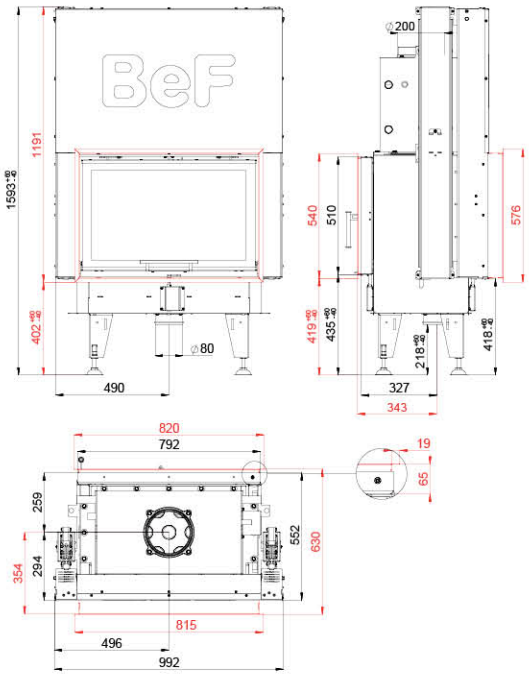

ČSN EN 13229

BLOWER DOOR TEST

eco design

10 - 16 kW | 3 - 5,5 kW | 84 % | 200 mm | 500 mm | 615 x 301 mm | 750 x 468 mm

12 Pa | 4,08 kg/h | 213 °C | 12,4 g/s | 0,0624 % | 37 mg/Nm³ | 328 kg

BEF **KOMPAKT FEEL 6 PASSIVE**

White
Pearl Beige
Latte
Mocca
Antracit
Bordeaux
Ferrari
Azzurro

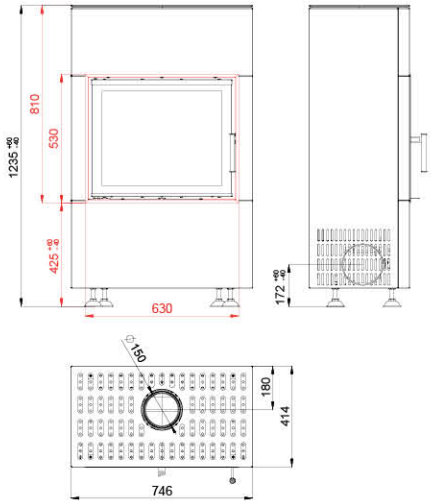

3 - 6 kW | 86 % | 150 mm | 330 mm | 400 x 218 mm | 570 x 468 mm

12 Pa | 1,15 kg/h | 193 °C | 3 g/s | 0,0814 % | 16 mg/Nm³ | 192 kg

BEF **KOMPAKT FEEL 6 CL/CP PASSIVE**

White
Pearl Beige
Latte
Mocca
Antracit
Bordeaux
Ferrari
Azzurro

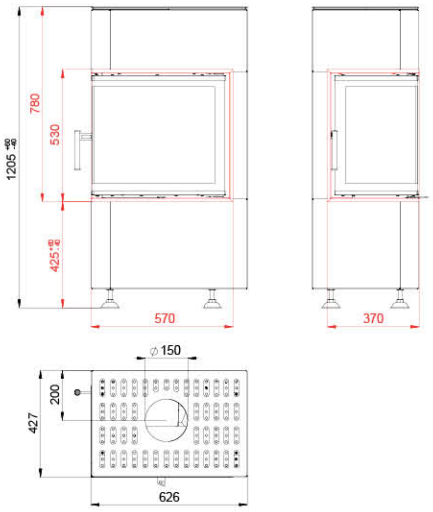

3 - 6 kW | 86 % | 150 mm | 250 mm | 370 x 211 mm | 530 x 330 x 468 mm

12 Pa | 1,15 kg/h | 193 °C | 3 g/s | 0,0814 % | 16 mg/Nm³ | 172 kg

BEF **KOMPAKT FEEL 7 PASSIVE**

White
Pearl Beige
Latte
Mocca
Antracit
Bordeaux
Ferrari
Azzurro

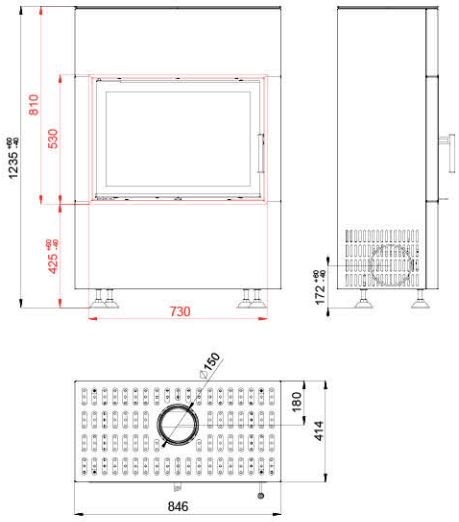

4 - 7 kW	84 %	150 mm	400 mm	494 x 218 mm	670 x 468 mm

12 Pa	1,48 kg/h	201 °C	4,2 g/s	0,0893 %	16 mg/Nm³	211 kg

BEF **KOMPAKT FEEL 7 CL/CP PASSIVE**

White
Pearl Beige
Latte
Mocca
Antracit
Bordeaux
Ferrari
Azzurro

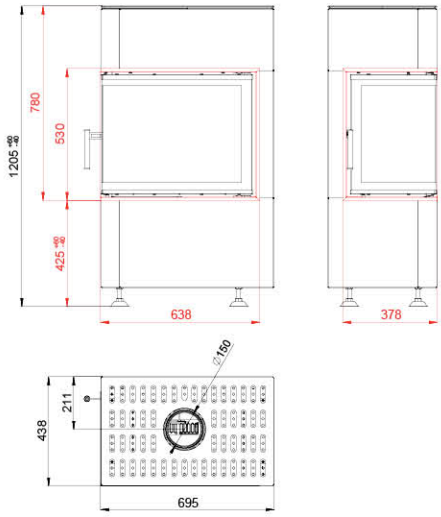

4 - 7 kW	84 %	150 mm	330 mm	440 x 211 mm	600 x 340 x 468 mm

12 Pa	1,48 kg/h	201 °C	4,2 g/s	0,0893 %	16 mg/Nm³	182 kg

BEF **KOMPAKT FEEL 8 PASSIVE**

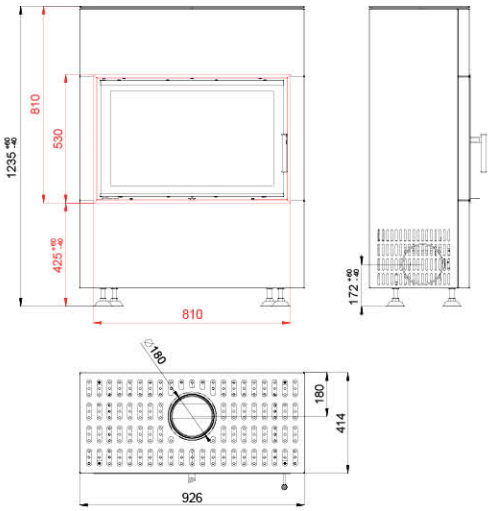

White
Pearl Beige
Latte
Mocca
Antracit
Bordeaux
Ferrari
Azzurro

5 - 8 kW | 84 % | 180 mm | 500 mm | 568 x 218 mm | 750 x 468 mm

12 Pa | 1,84 kg/h | 215 °C | 4,9 g/s | 0,0943 % | 18 mg/Nm³ | 228 kg

BEF **KOMPAKT FEEL 8 CL/CP PASSIVE**

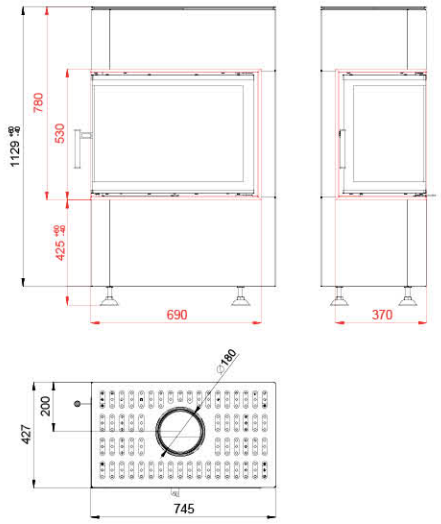

White
Pearl Beige
Latte
Mocca
Antracit
Bordeaux
Ferrari
Azzurro

5 - 8 kW | 84 % | 180 mm | 400 mm | 490 x 211 mm | 650 x 330 x 468 mm

12 Pa | 1,84 kg/h | 215 °C | 4,9 g/s | 0,0943 % | 18 mg/Nm³ | 195 kg

BEF **KOMPAKT THERM 6 PASSIVE**

White
Pearl Beige
Latte
Mocca
Antracit
Bordeaux
Ferrari
Azzurro

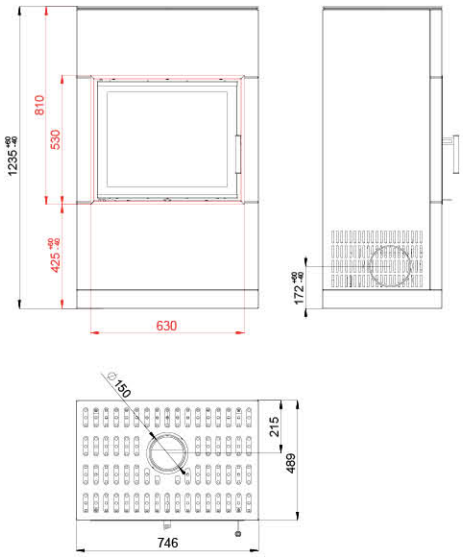

4 - 7 kW | 82 % | 150 mm | 330 mm | 435 x 295 mm | 570 x 468 mm

12 Pa | 1,85 kg/h | 262 °C | 4,6 g/s | 0,0873 % | 19 mg/Nm³ | 217 kg

BEF **KOMPAKT THERM 6 CL/CP PASSIVE**

White
Pearl Beige
Latte
Mocca
Antracit
Bordeaux
Ferrari
Azzurro

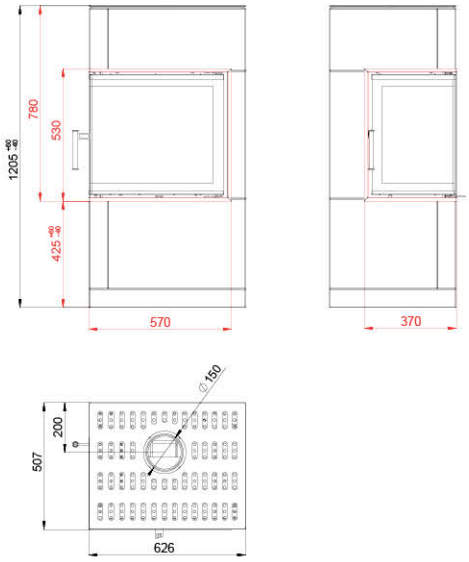

4 - 7 kW | 82 % | 150 mm | 330 mm | 395 x 295 mm | 530 x 330 x 468 mm

12 Pa | 1,85 kg/h | 262 °C | 4,6 g/s | 0,0873 % | 19 mg/Nm³ | 189 kg

BEF **KOMPAKT THERM 7 PASSIVE**

White
Pearl Beige
Latte
Mocca
Antracit
Bordeaux
Ferrari
Azzurro

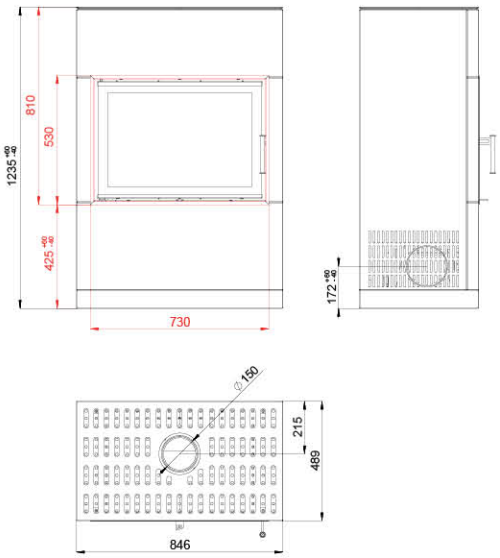

5 - 8 kW | 82 % | 150 mm | 400 mm | 520 x 295 mm | 670 x 468 mm

12 Pa | 2,05 kg/h | 264 °C | 5,6 g/s | 0,0868 % | 19 mg/Nm³ | 239 kg

BEF **KOMPAKT THERM 7 CL/CP PASSIVE**

White
Pearl Beige
Latte
Mocca
Antracit
Bordeaux
Ferrari
Azzurro

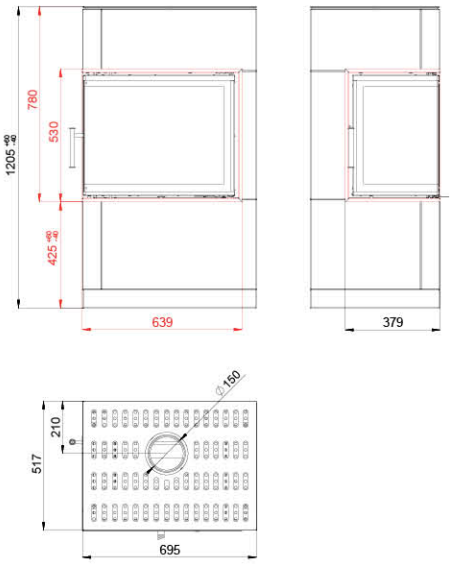

5 - 8 kW | 82 % | 150 mm | 330 mm | 465 x 295 mm | 600 x 340 x 468 mm

12 Pa | 2,05 kg/h | 264 °C | 5,6 g/s | 0,0868 % | 19 mg/Nm³ | 214 kg

BEF **KOMPAKT THERM 8 PASSIVE**

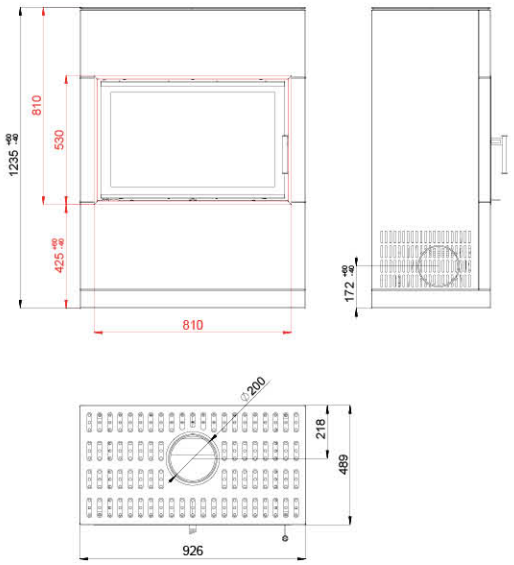

White
Pearl Beige
Latte
Mocca
Antracit
Bordeaux
Ferrari
Azzurro

7 - 10 kW | 84 % | 200 mm | 500 mm | 600 x 295 mm | 750 x 468 mm

12 Pa | 2,7 kg/h | 257 °C | 6 g/s | 0,0868 % | 18 mg/Nm³ | 256 kg

BEF **KOMPAKT THERM 8 CL/CP PASSIVE**

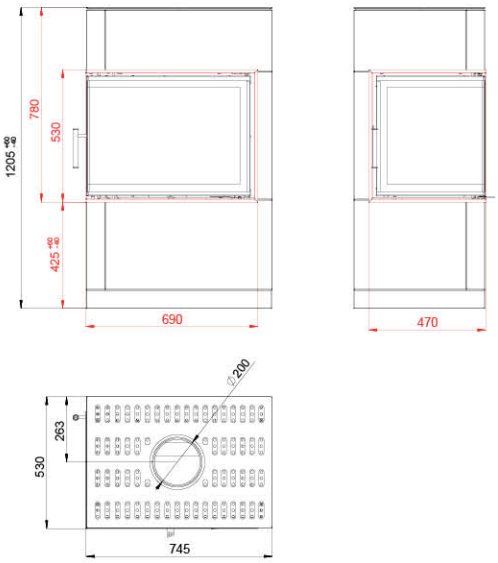

White
Pearl Beige
Latte
Mocca
Antracit
Bordeaux
Ferrari
Azzurro

7 - 10 kW | 84 % | 200 mm | 400 mm | 515 x 295 mm | 650 x 430 x 468 mm

12 Pa | 2,7 kg/h | 257 °C | 6 g/s | 0,0868 % | 18 mg/Nm³ | 226 kg

BEF **RUSTICAL**

16:9

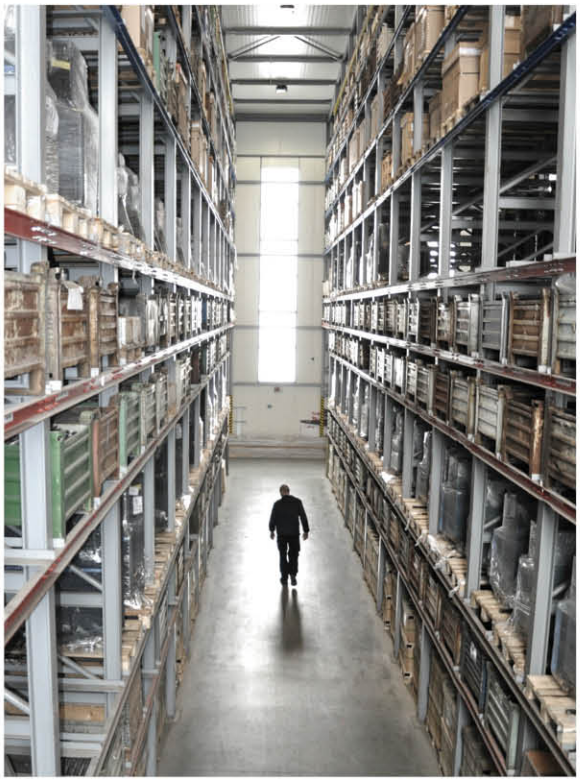

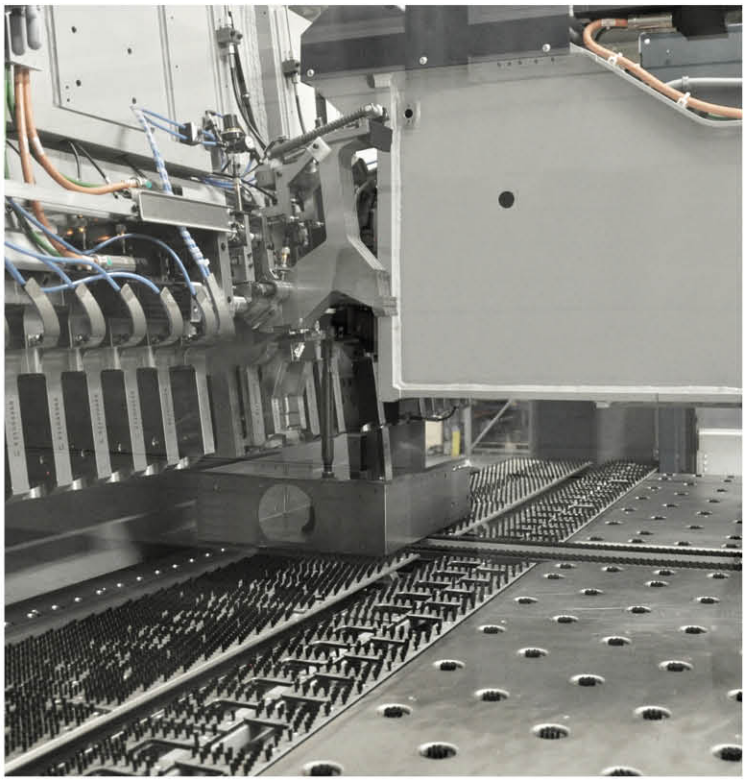

* These data are informative, the manufacturer reserves the right to change.

BEF HOME
fire for your heart

CATALOGUE OF PASSIVE FIREPLACE INSERTS

BEF HOME
fire for your heart

CZ | Kotvrdovice 277
679 07 Kotvrdovice
Czech Republic

tel.: +420 516 428 240
e-mail: info@bef.cz
IČ: 25 52 46 82
DIČ: CZ 25 52 46 82

SK | Turá Lúka 97
907 03 Myjava
Slovakia

tel.: +421 346 216 790
e-mail: info@bef.sk

PL | Bąków ul. Główna 4a
43-246 Strumień
Poland

tel.: +48 530 712 534
tel.: +48 530 712 624
e-mail: info@befpolska.pl

FR | 1 Place de l'Homme de Fer
67 000 Strasbourg
France

tél.: 00 33 672 383 113
e-mail: info@foyers-bef.fr

BEF **PASSIVE 6**

ČSN EN
13229

BLOWER DOOR
TEST

eco design

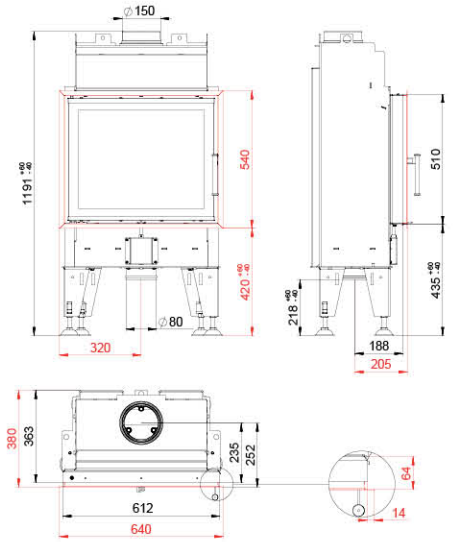

3 - 6 kW | 86 % | 150 mm | 330 mm | 400 x 218 mm | 570 x 468 mm (2x)

12 Pa | 1,15 kg/h | 193 °C | 3 g/s | 0,0814 % | 16 mg/Nm³ | 116 kg

BEF **PASSIVE 6 CL/CP**

ČSN EN
13229

BLOWER DOOR
TEST

eco design

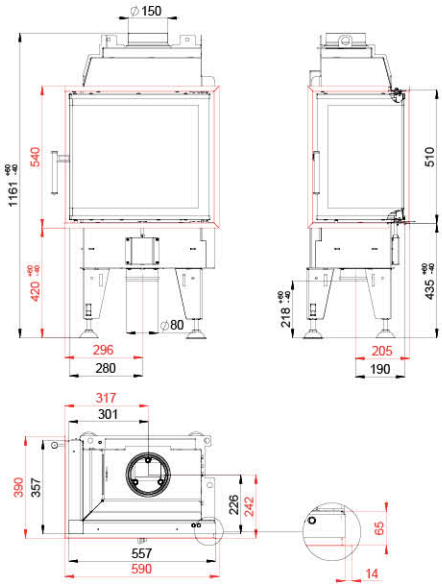

3 - 6 kW | 86 % | 150 mm | 250 mm | 370 x 211 mm | 530 x 330 x 468 mm (2x)

12 Pa | 1,15 kg/h | 193 °C | 3 g/s | 0,0814 % | 16 mg/Nm³ | 112 kg

BEF **PASSIVE V 6**

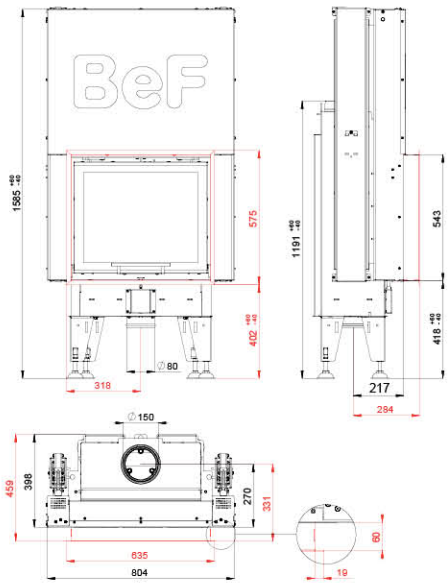

ČSN EN 13229

BLOWER DOOR TEST

eco design

3 - 6 kW | 86 % | 150 mm | 330 mm | 400 x 218 mm | 570 x 468 mm (2x)

12 Pa | 1,15 kg/h | 193 °C | 3 g/s | 0,0814 % | 16 mg/Nm³ | 213 kg

BEF **PASSIVE 7**

ČSN EN
13229

BLOWER DOOR
TEST

eco design

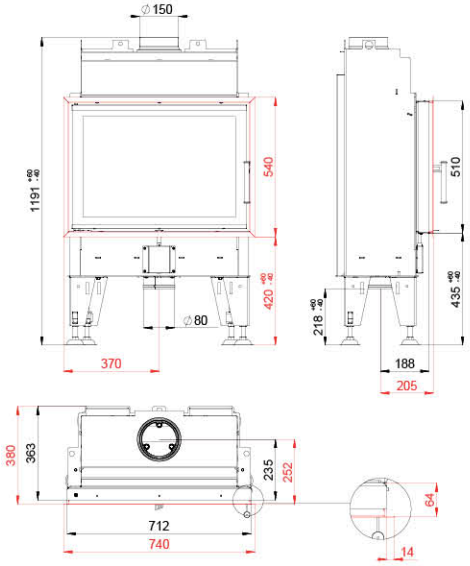

4 - 7 kW | 84 % | 150 mm | 400 mm | 494 x 218 mm | 670 x 468 mm

12 Pa | 1,48 kg/h | 201 °C | 4,2 g/s | 0,0893 % | 16 mg/Nm³ | 141 kg

BEF **PASSIVE 7 CL/CP**

ČSN EN
13229

BLOWER DOOR
TEST

eco design

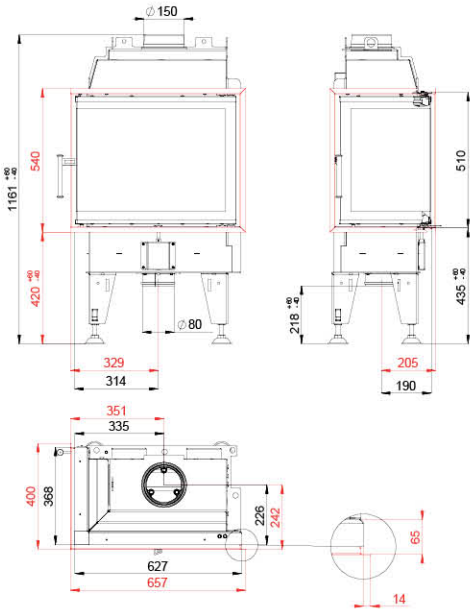

4 - 7 kW | 84 % | 150 mm | 330 mm | 440 x 211 mm | 600 x 340 x 468 mm

12 Pa | 1,48 kg/h | 201 °C | 4,2 g/s | 0,0893 % | 16 mg/Nm³ | 123 kg

BEF **PASSIVE V 7**

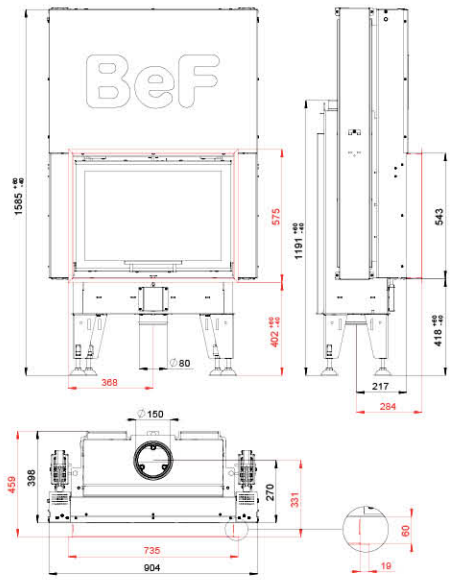

ČSN EN 13229

BLOWER DOOR TEST

eco design

4 - 7 kW	84 %	150 mm	400 mm	494 x 218 mm	670 x 468 mm	
12 Pa	1,48 kg/h	201 °C	4,2 g/s	0,0893 %	16 mg/Nm³	233 kg

BEF **PASSIVE 8**

ČSN EN
13229

BLOWER DOOR
TEST

eco design

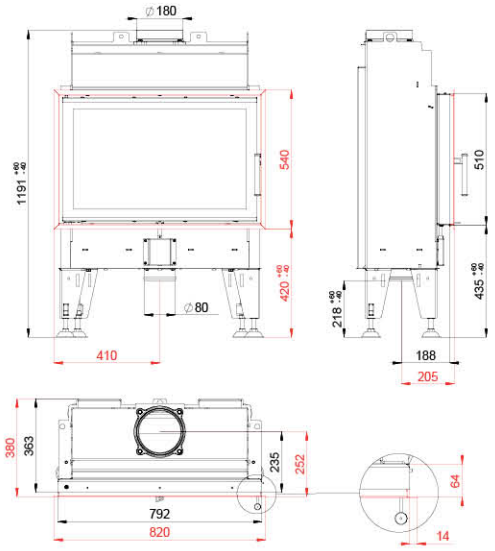

5 - 8 kW | 84 % | 180 mm | 500 mm | 568 x 218 mm | 2x 750 x 468 mm

12 Pa | 1,84 kg/h | 215 °C | 4,9 g/s | 0,0943 % | 18 mg/Nm³ | 144 kg

BEF **PASSIVE 8 CL/CP**

ČSN EN
13229

BLOWER DOOR
TEST

eco design

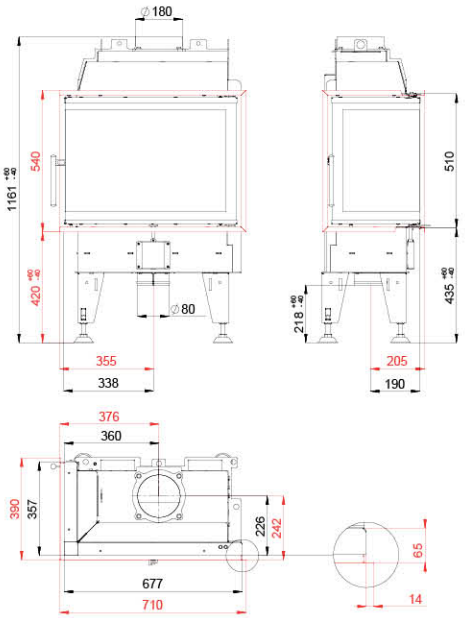

5 - 8 kW | 84 % | 180 mm | 400 mm | 490 x 211 mm | 2x 650 x 330 x 468 mm

12 Pa | 1,84 kg/h | 215 °C | 4,9 g/s | 0,0943 % | 18 mg/Nm³ | 128 kg

BEF **PASSIVE V 8**

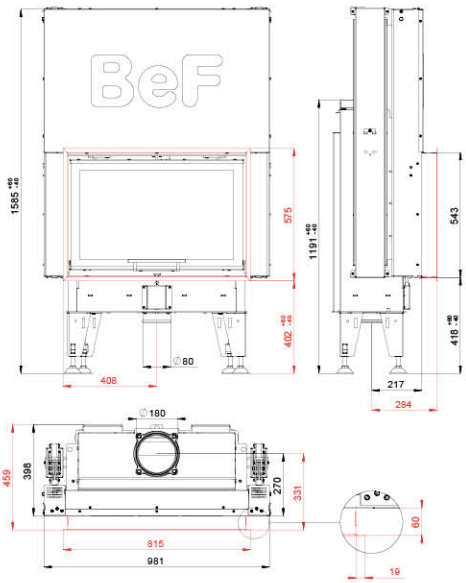

ČSN EN 13229

BLOWER DOOR TEST

eco design

5 - 8 kW	84 %	180 mm	500 mm	568 x 218 mm	750 x 468 mm	
12 Pa	1,84 kg/h	215 °C	4,9 g/s	0,0943 %	18 mg/Nm³	250 kg

BEF **THERM 6 PASSIVE**

ČSN EN
13229

BLOWER DOOR
TEST

eco design

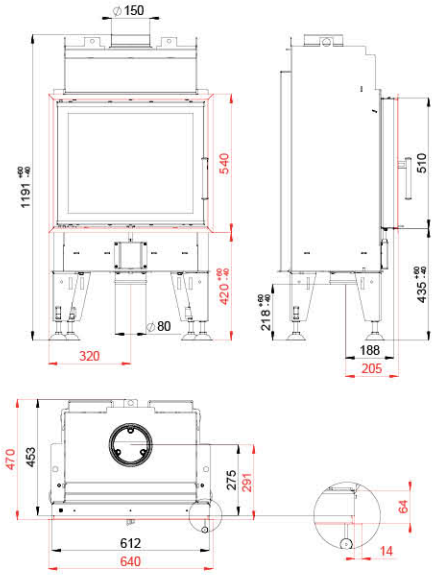

4 - 7 kW | 82 % | 150 mm | 330 mm | 435 x 295 mm | 2x 570 x 468 mm

12 Pa | 1,85 kg/h | 262 °C | 4,6 g/s | 0,0873 % | 19 mg/Nm³ | 152 kg

BEF **THERM 6 CL/CP PASSIVE**

ČSN EN
13229

BLOWER DOOR
TEST

eco design

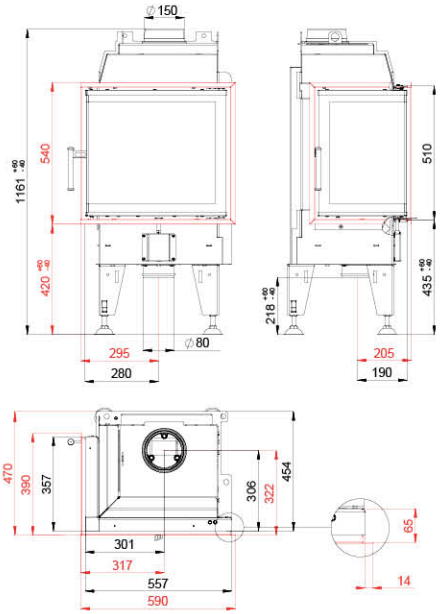

4 - 7 kW | 82 % | 150 mm | 330 mm | 395 x 295 mm | 2x 530 x 330 x 468 mm

12 Pa | 1,85 kg/h | 262 °C | 4,6 g/s | 0,0873 % | 19 mg/Nm³ | 131 kg

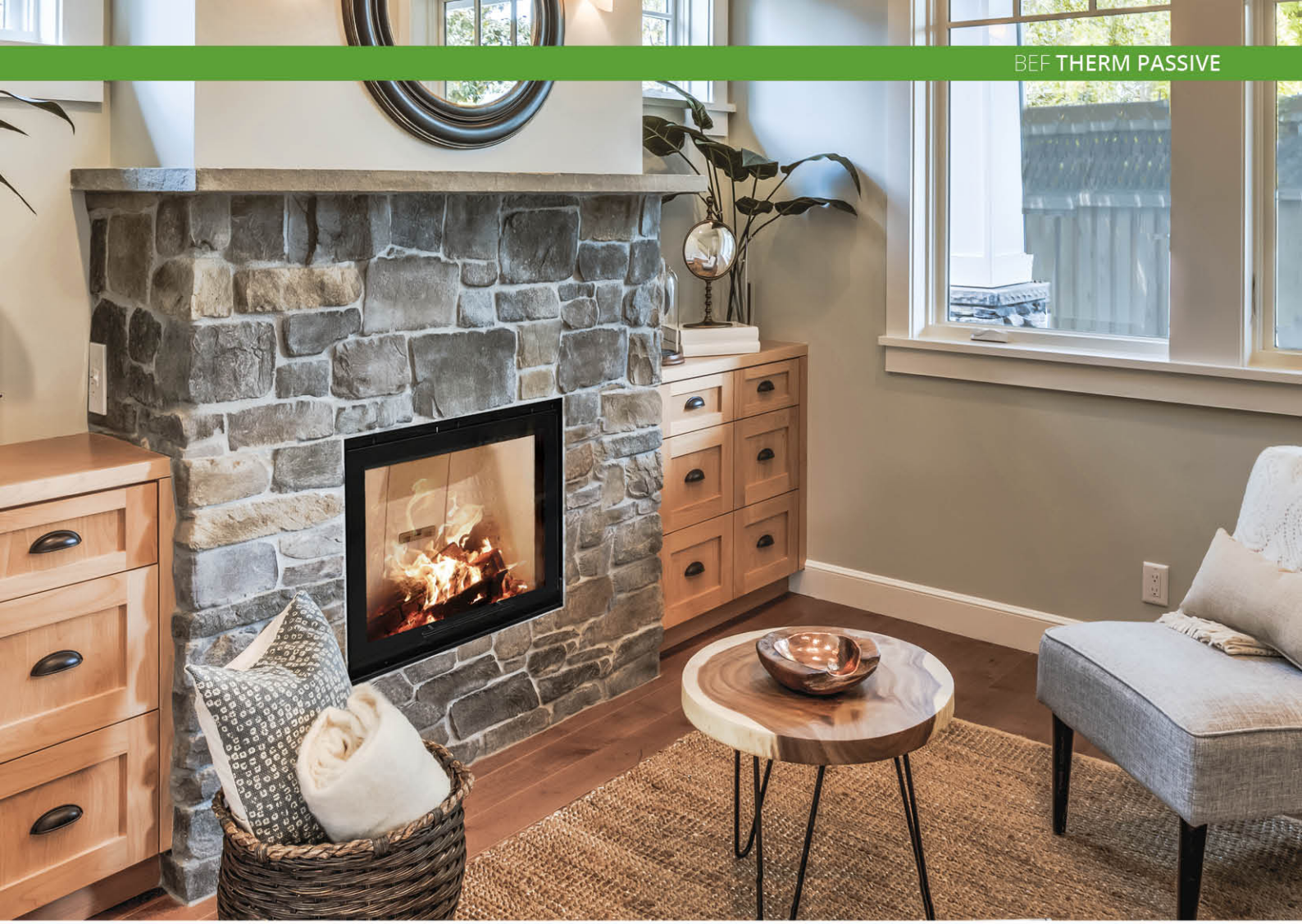

BEF **THERM PASSIVE V 6**

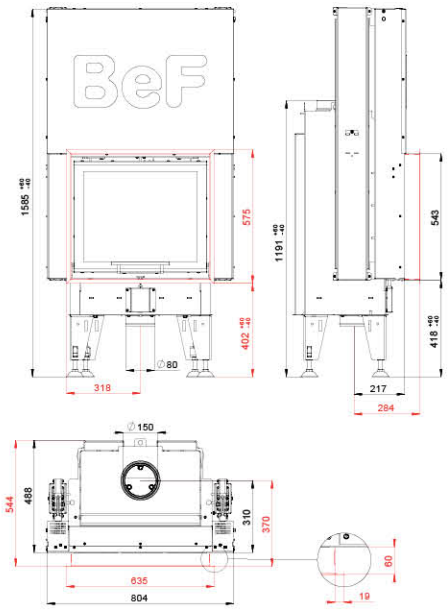

ČSN EN 13229

BLOWER DOOR TEST

eco design

4 - 7 kW	82 %	150 mm	330 mm	435 x 295 mm	570 x 468 mm	
12 Pa	1,85 kg/h	262 °C	4,6 g/s	0,0873 %	19 mg/Nm³	234 kg

BEF **THERM 7 PASSIVE**

ČSN EN
13229

BLOWER DOOR
TEST

eco design

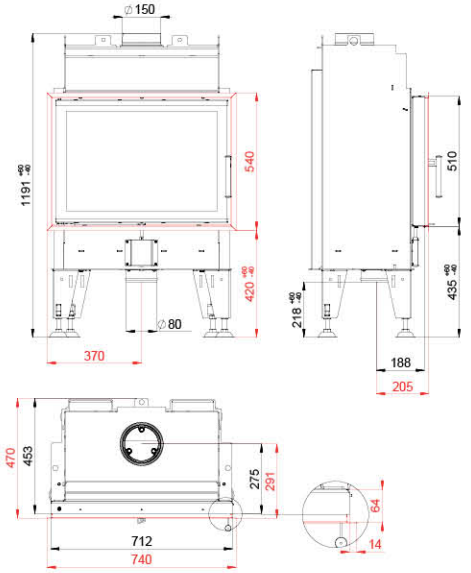

5 - 8 kW | 82 % | 150 mm | 400 mm | 520 x 295 mm | 670 x 468 mm

12 Pa | 2,05 kg/h | 264 °C | 5,6 g/s | 0,0868 % | 19 mg/Nm³ | 174 kg

BEF **THERM 7 CL/CP PASSIVE**

ČSN EN
13229

BLOWER DOOR
TEST

eco design

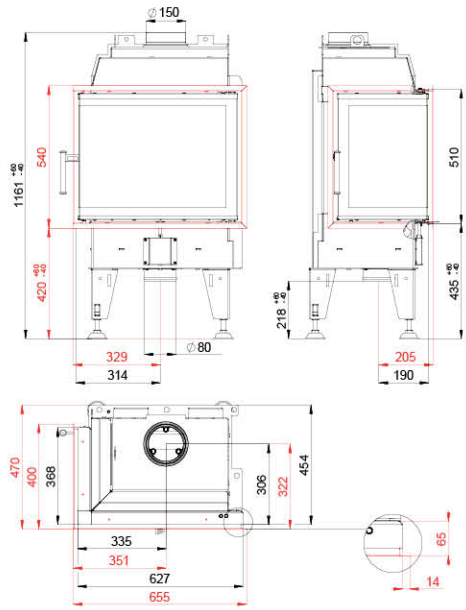

5 - 8 kW | 82 % | 150 mm | 330 mm | 465 x 295 mm | 600 x 340 x 468 mm

12 Pa | 2,05 kg/h | 264 °C | 5,6 g/s | 0,0868 % | 19 mg/Nm³ | 146 kg

BEF **THERM PASSIVE V 7**

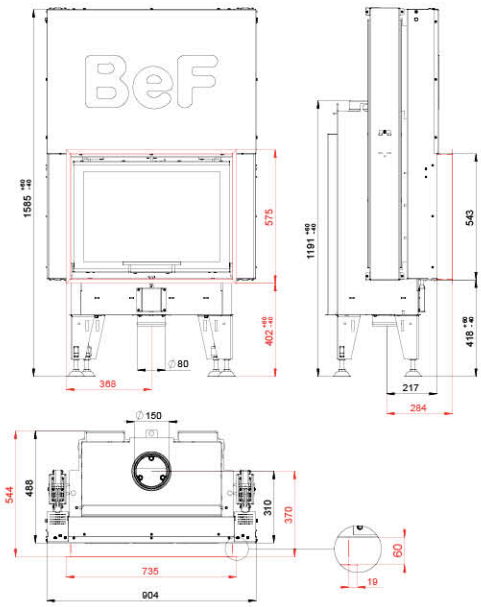

ČSN EN 13229

BLOWER DOOR TEST

eco design

5 - 8 kW	82 %	150 mm	400 mm	520 x 295 mm	670 x 468 mm

12 Pa	2,05 kg/h	264 °C	5,6 g/s	0,0868 %	19 mg/Nm³	256 kg

BEF **THERM 8 PASSIVE**

ČSN EN
13229

BLOWER DOOR
TEST

eco design

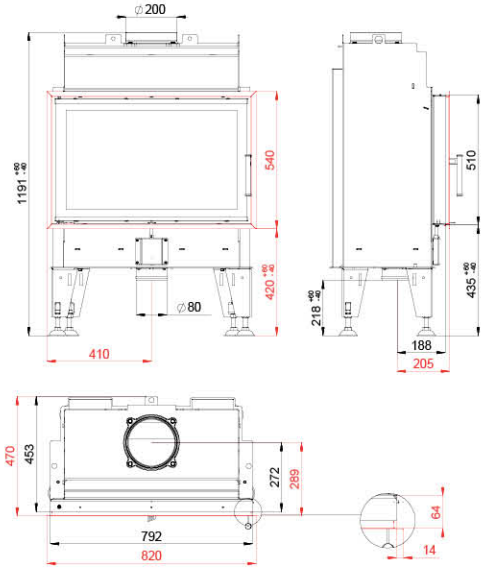

7 - 10 kW | 84 % | 200 mm | 500 mm | 600 x 295 mm | 750 x 468 mm

12 Pa | 2,7 kg/h | 257 °C | 6 g/s | 0,0868 % | 18 mg/Nm³ | 189 kg

BEF **THERM 8 CL/CP PASSIVE**

ČSN EN
13229

BLOWER DOOR
TEST

eco design

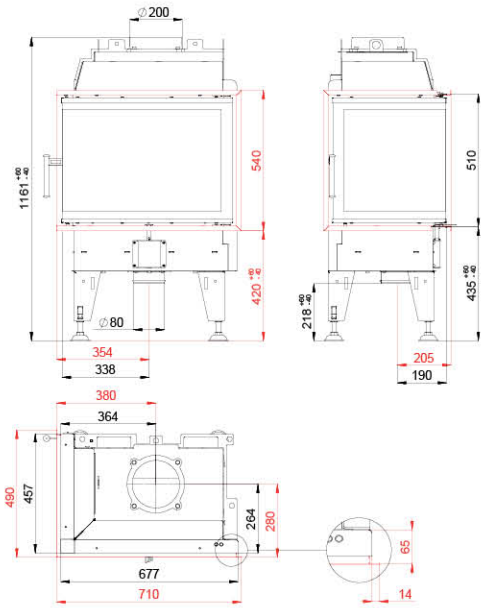

7 - 10 kW | 84 % | 200 mm | 400 mm | 515 x 295 mm | 650 x 430 x 468 mm

12 Pa | 2,7 kg/h | 257 °C | 6 g/s | 0,0868 % | 18 mg/Nm³ | 157 kg

BEF **THERM PASSIVE V 8**

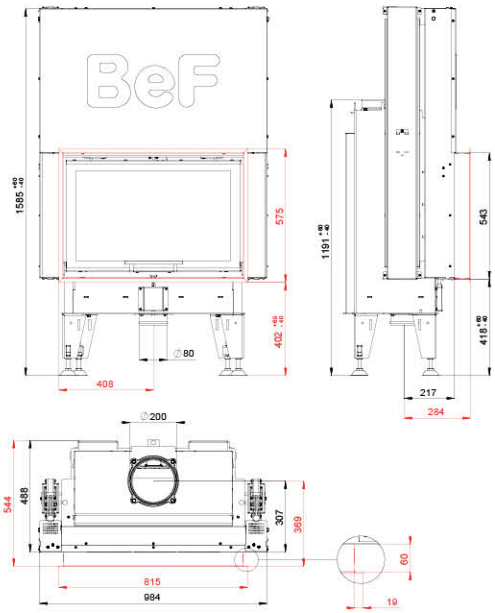

ČSN EN 13229

BLOWER DOOR TEST

eco design

7 - 10 kW	84 %	200 mm	500 mm	600 x 295 mm	750 x 468 mm	
12 Pa	2,7 kg/h	257 °C	6 g/s	0,0868 %	18 mg/Nm³	275 kg

BEF **DOUBLE 6 FEEL PASSIVE**

ČSN EN
13229

BLOWER DOOR
TEST

eco design

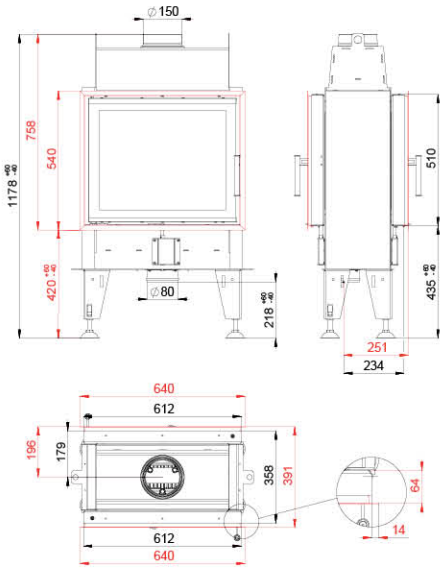

3 - 6 kW | 84 % | 150 mm | 330 mm | 416 x 210 mm | 2x 570 x 468 mm 570 x 468 mm

12 Pa | 1,53 kg/h | 206 °C | 4,3 g/s | 0,0946 % | 17 mg/Nm³ | 120 kg

BEF **DOUBLE 6 N FEEL PASSIVE**

ČSN EN
13229

BLOWER DOOR
TEST

eco design

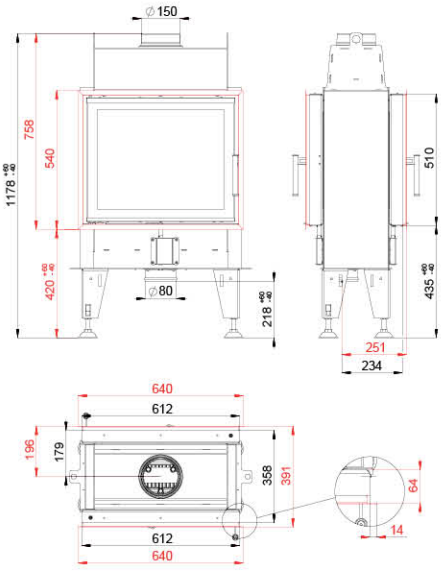

3 - 6 kW | 84 % | 150 mm | 330 mm | 416 x 210 mm | 2x 570 x 468 mm

12 Pa | 1,53 kg/h | 206 °C | 4,3 g/s | 0,0946 % | 17 mg/Nm³ | 126 kg

BEF **DOUBLE V 6 FEEL PASSIVE**

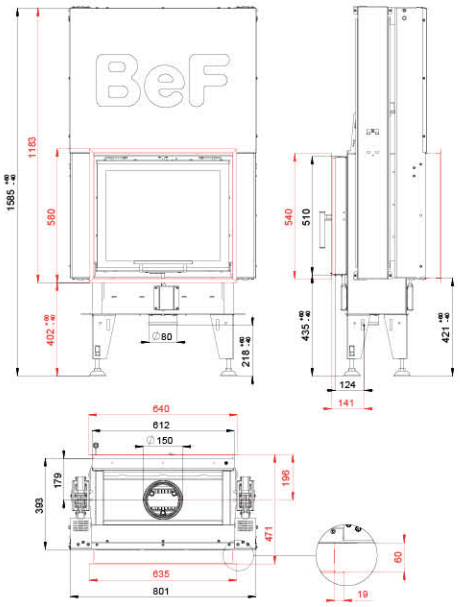

ČSN EN 13229

BLOWER DOOR TEST

eco design

3 - 6 kW | 84 % | 150 mm | 330 mm | 416 x 210 mm | 2x 570 x 468 mm 570 x 468 mm

12 Pa | 1,53 kg/h | 206 °C | 4,3 g/s | 0,0946 % | 17 mg/Nm³ | 204 kg

BEF **DOUBLE V 6 N FEEL PASSIVE**

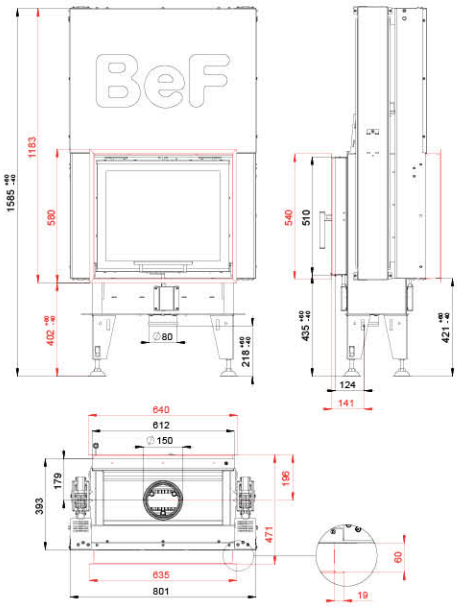

ČSN EN 13229

BLOWER DOOR TEST

eco design

3 - 6 kW | 84 % | 150 mm | 330 mm | 416 x 210 mm | 2x 570 x 468 mm

12 Pa | 1,53 kg/h | 206 °C | 4,3 g/s | 0,0946 % | 17 mg/Nm³ | 201 kg

BEF **DOUBLE 7 FEEL PASSIVE**

ČSN EN
13229

BLOWER DOOR
TEST

eco design

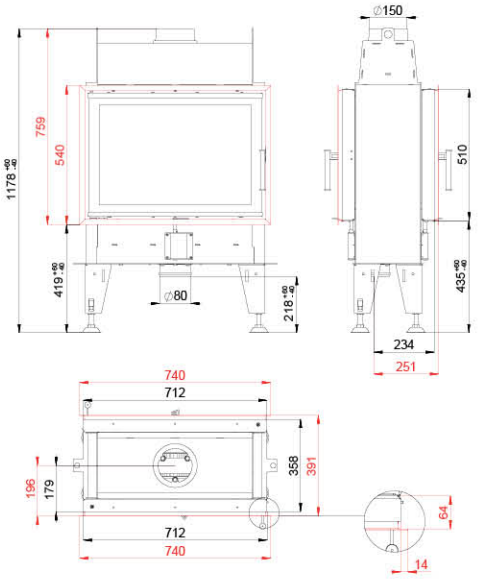

4 - 7 kW	82 %	150 mm	400 mm	504 x 210 mm	2x 670 x 468 mm 670 x 468 mm

12 Pa	2,47 kg/h	232 °C	6,5 g/s	0,0811 %	18 mg/Nm³	133 kg

BEF **DOUBLE 7 N FEEL PASSIVE**

ČSN EN
13229

BLOWER DOOR
TEST

eco design

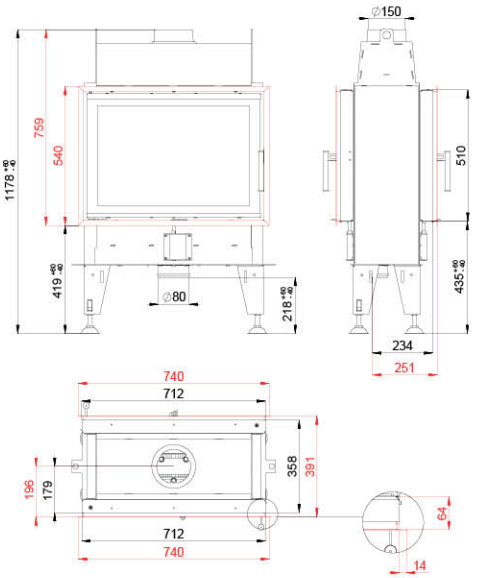

4 - 7 kW	82 %	150 mm	400 mm	504 x 210 mm	2x 670 x 468 mm

12 Pa	2,47 kg/h	232 °C	6,5 g/s	0,0811 %	18 mg/Nm³	134 kg

BEF **DOUBLE V 7 FEEL PASSIVE**

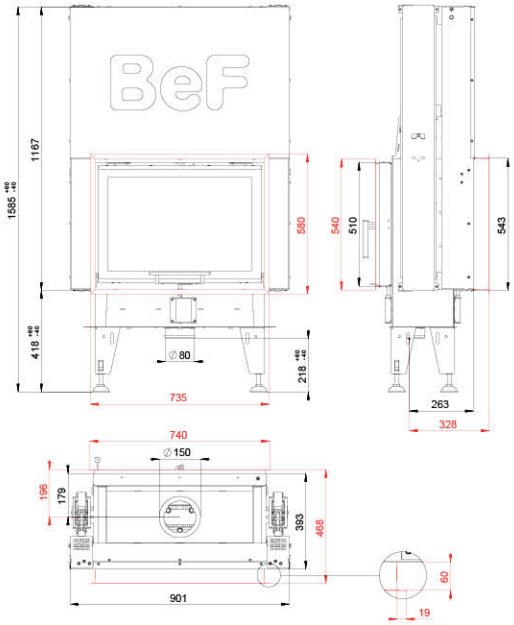

ČSN EN 13229

BLOWER DOOR TEST

eco design

4 - 7 kW | 82 % | 150 mm | 400 mm | 504 x 210 mm | 2x 670 x 468 mm 670 x 468 mm

12 Pa | 2,47 kg/h | 232 °C | 6,5 g/s | 0,0811 % | 18 mg/Nm³ | 220 kg

BEF **DOUBLE V 7 N FEEL PASSIVE**

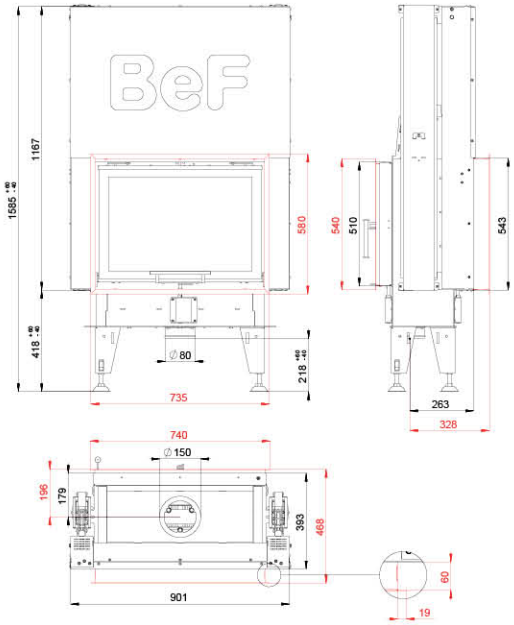

ČSN EN 13229

BLOWER DOOR TEST

eco design

4 - 7 kW | 82 % | 150 mm | 400 mm | 504 x 210 mm | 2x 670 x 468 mm

12 Pa | 2,47 kg/h | 232 °C | 6,5 g/s | 0,0811 % | 18 mg/Nm³ | 211 kg

BEF **TWIN 8 II. PASSIVE**

ČSN EN
13229

BLOWER DOOR
TEST

eco design

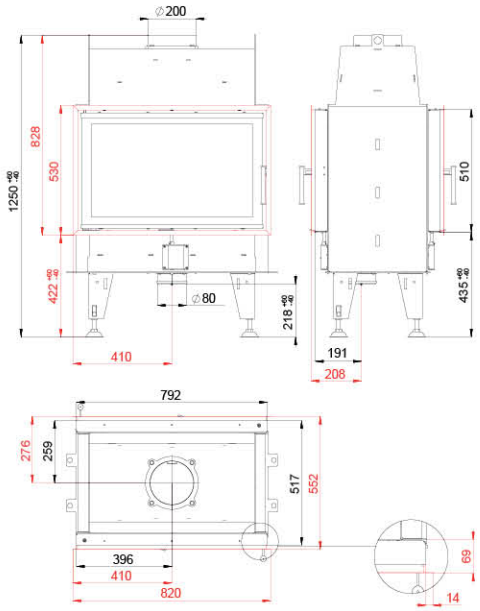

5 - 11 kW | 80 % | 200 mm | 500 mm | 615 x 320 mm | 2x 750 x 468 mm 750 x 468 mm

12 Pa | 2,75 kg/h | 240 °C | 9,3 g/s | 0,0993 % | 30 mg/Nm³ | 207 kg

BEF **TWIN 8 N II. PASSIVE**

ČSN EN
13229

BLOWER DOOR
TEST

eco design

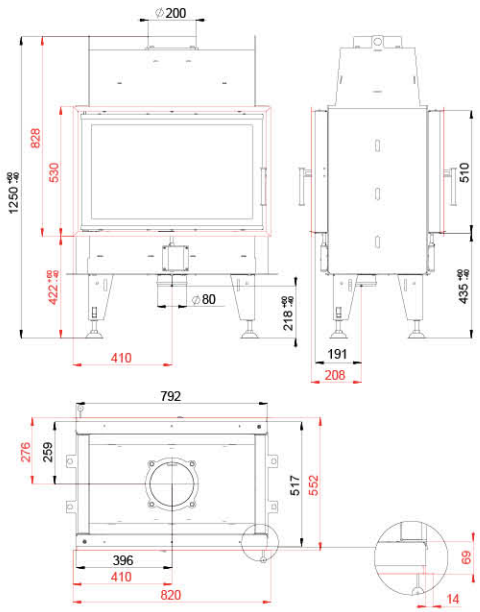

5 - 11 kW | 80 % | 200 mm | 500 mm | 615 x 320 mm | 750 x 468 mm

12 Pa | 2,75 kg/h | 240 °C | 9,3 g/s | 0,0993 % | 30 mg/Nm³ | 203 kg

BEF **TWIN V 8 II. PASSIVE**

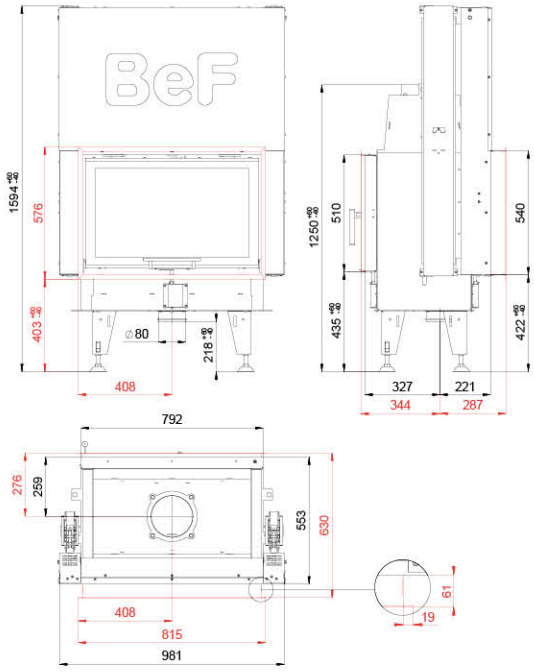

ČSN EN 13229

BLOWER DOOR TEST

eco design

5 - 11 kW | 80 % | 200 mm | 500 mm | 615 x 320 mm | 2x 750 x 468 mm 750 x 468 mm

12 Pa | 2,75 kg/h | 240 °C | 9,3 g/s | 0,0993 % | 30 mg/Nm³ | 286 kg

BEF **TWIN V 8 N II. PASSIVE**

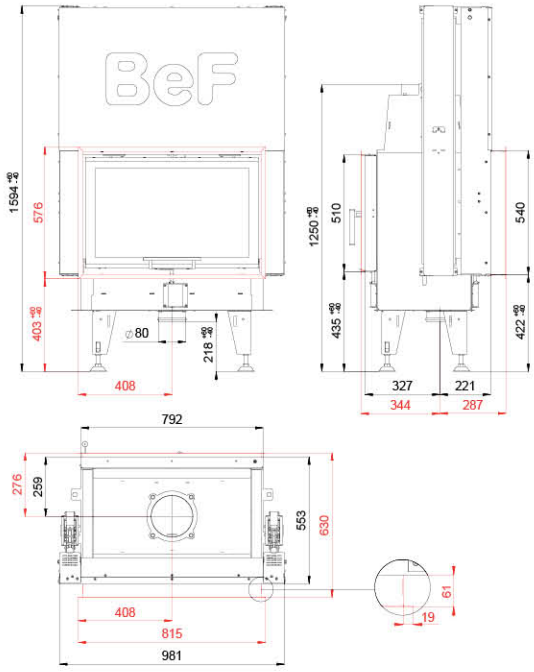

ČSN EN 13229

BLOWER DOOR TEST

eco design

5 - 11 kW | 80 % | 200 mm | 500 mm | 615 x 320 mm | 2x 750 x 468 mm

12 Pa | 2,75 kg/h | 240 °C | 9,3 g/s | 0,0993 % | 30 mg/Nm³ | 285 kg

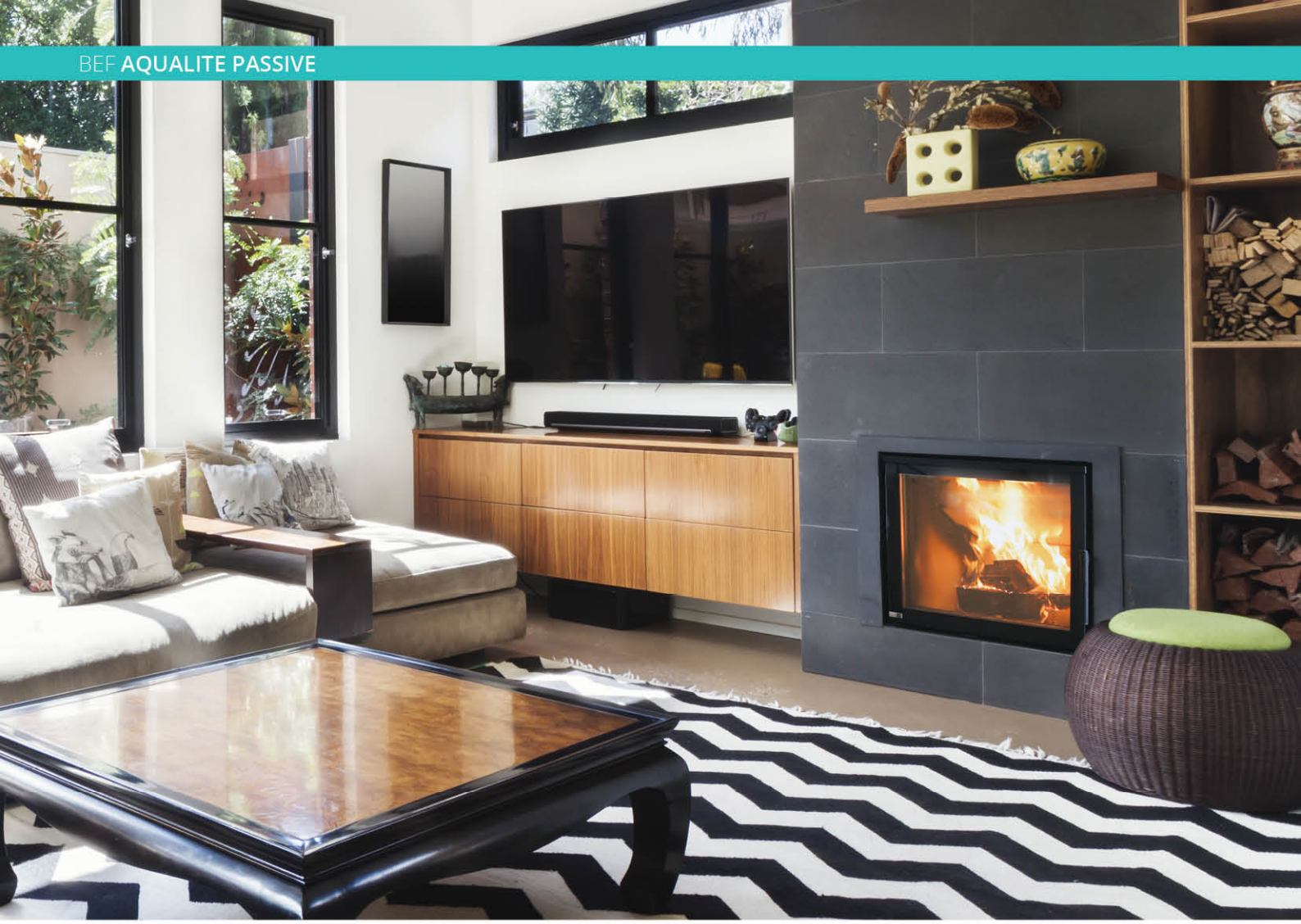

BEF **AQUALITE 6 PASSIVE**

ČSN EN
13229

BLOWER DOOR
TEST

eco design

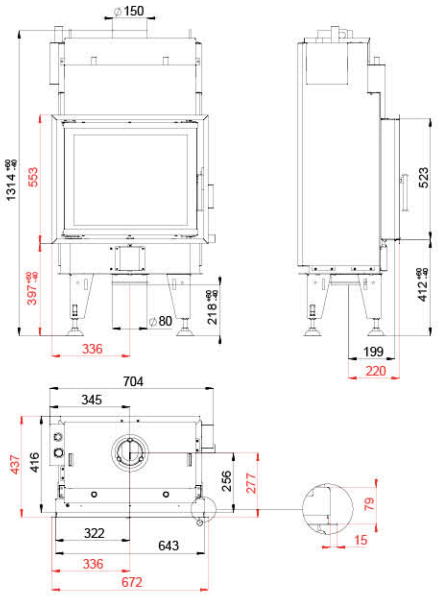

5 - 10 kW | 3,5 - 8 kW | 87 % | 150 mm | 400 mm | 445 x 225 mm | 2x 570 x 468 mm + 1x 510 x 400 mm

11 Pa | 2,22 kg/h | 178 °C | 6,5 g/s | 0,0840 % | 18 mg/Nm³ | 230 kg

BEF **TWIN 8 AQUATIC II. PASSIVE**

ČSN EN 13229

BLOWER DOOR TEST

eco design

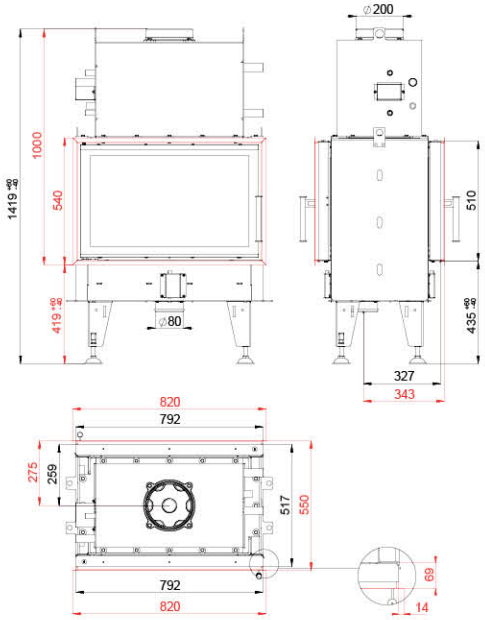

10 - 16 kW	3 - 5,5 kW	84 %	200 mm	500 mm	615 x 301 mm	2x 750 x 468 mm 750 x 468 mm

12 Pa	4,08 kg/h	213 °C	12,4 g/s	0,0624 %	37 mg/Nm³	265 kg

BEF **TWIN 8 N AQUATIC II. PASSIVE**

ČSN EN 13229

BLOWER DOOR TEST

eco design

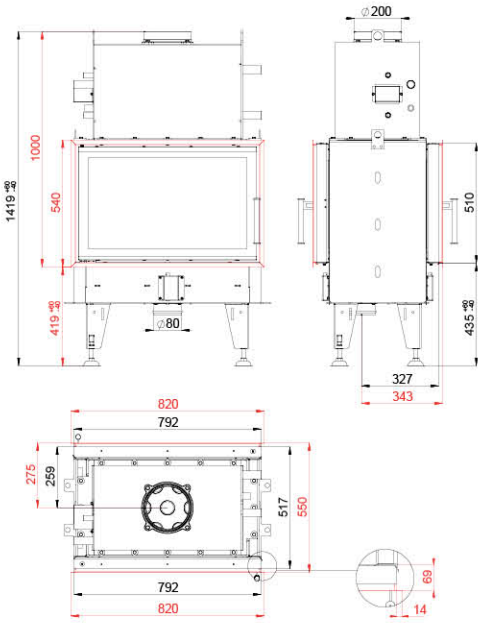

10 - 16 kW	3 - 5,5 kW	84 %	200 mm	500 mm	615 x 301 mm	2x 750 x 468 mm

12 Pa	4,08 kg/h	213 °C	12,4 g/s	0,0624 %	37 mg/Nm³	263 kg

BEF **TWIN V 8 AQUATIC II. PASSIVE**

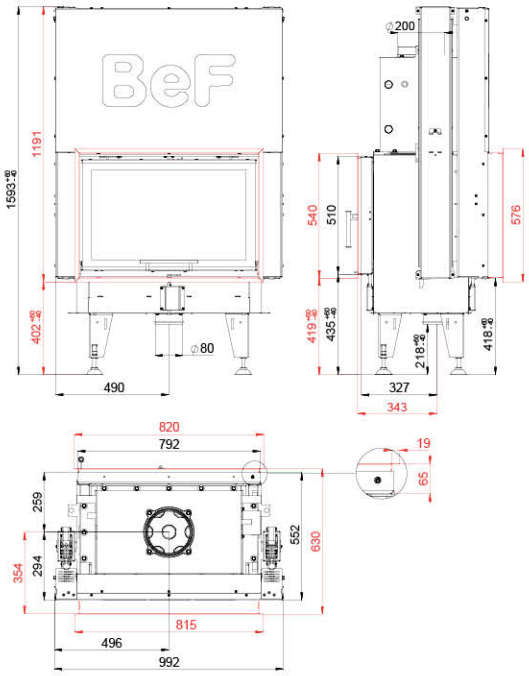

ČSN EN 13229

BLOWER DOOR TEST

eco design

10 - 16 kW | 3 - 5,5 kW | 84 % | 200 mm | 500 mm | 615 x 301 mm | 750 x 468 mm, 750 x 468 mm

12 Pa | 4,08 kg/h | 213 °C | 12,4 g/s | 0,0624 % | 37 mg/Nm³ | 329 kg

BEF **TWIN V 8 N AQUATIC II. PASSIVE**

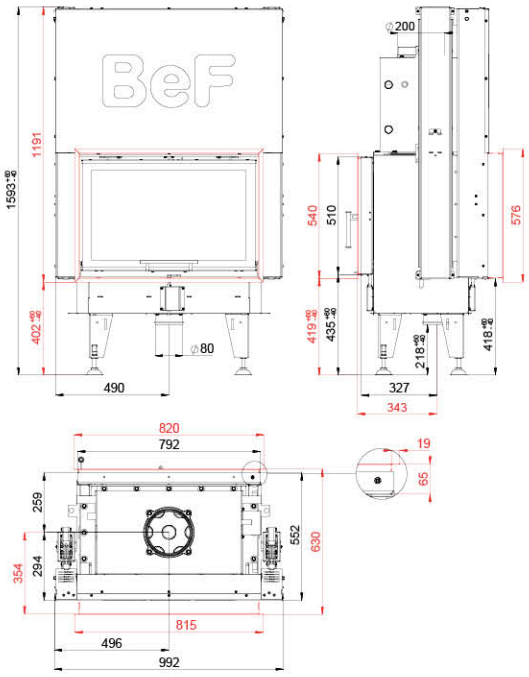

ČSN EN 13229

BLOWER DOOR TEST

eco design

10 - 16 kW | 3 - 5,5 kW | 84 % | 200 mm | 500 mm | 615 x 301 mm | 750 x 468 mm

12 Pa | 4,08 kg/h | 213 °C | 12,4 g/s | 0,0624 % | 37 mg/Nm³ | 328 kg

BEF **KOMPAKT FEEL 6 PASSIVE**

White
Pearl Beige
Latte
Mocca
Antracit
Bordeaux
Ferrari
Azzurro

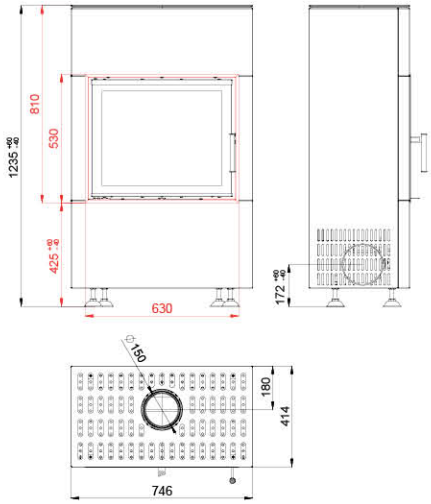

3 - 6 kW | 86 % | 150 mm | 330 mm | 400 x 218 mm | 570 x 468 mm

12 Pa | 1,15 kg/h | 193 °C | 3 g/s | 0,0814 % | 16 mg/Nm³ | 192 kg

BEF **KOMPAKT FEEL 6 CL/CP PASSIVE**

White
Pearl Beige
Latte
Mocca
Antracit
Bordeaux
Ferrari
Azzurro

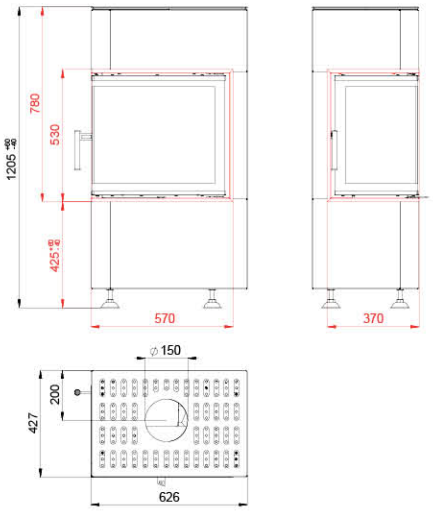

3 - 6 kW | 86 % | 150 mm | 250 mm | 370 x 211 mm | 530 x 330 x 468 mm

12 Pa | 1,15 kg/h | 193 °C | 3 g/s | 0,0814 % | 16 mg/Nm³ | 172 kg

BEF **KOMPAKT FEEL 7 PASSIVE**

White
Pearl Beige
Latte
Mocca
Antracit
Bordeaux
Ferrari
Azzurro

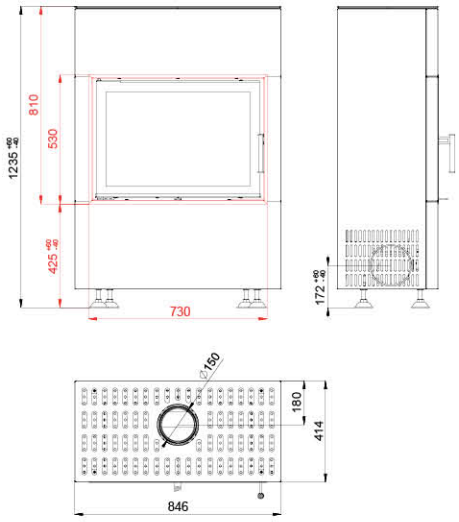

4 - 7 kW	84 %	150 mm	400 mm	494 x 218 mm	670 x 468 mm

12 Pa	1,48 kg/h	201 °C	4,2 g/s	0,0893 %	16 mg/Nm³	211 kg

BEF **KOMPAKT FEEL 7 CL/CP PASSIVE**

White
Pearl Beige
Latte
Mocca
Antracit
Bordeaux
Ferrari
Azzurro

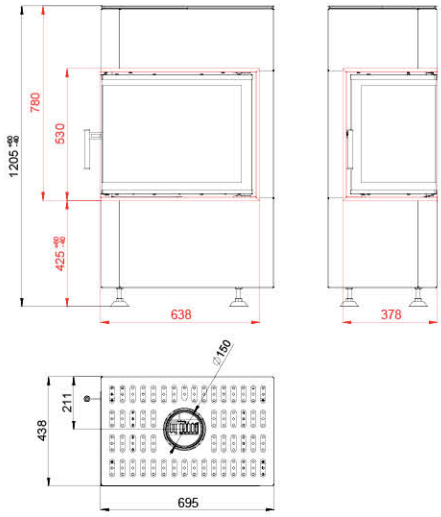

4 - 7 kW	84 %	150 mm	330 mm	440 x 211 mm	600 x 340 x 468 mm

12 Pa	1,48 kg/h	201 °C	4,2 g/s	0,0893 %	16 mg/Nm³	182 kg

BEF **KOMPAKT FEEL 8 PASSIVE**

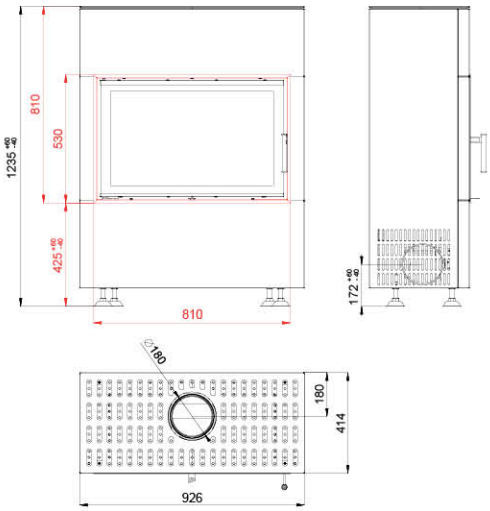

White
Pearl Beige
Latte
Mocca
Antracit
Bordeaux
Ferrari
Azzurro

5 - 8 kW | 84 % | 180 mm | 500 mm | 568 x 218 mm | 750 x 468 mm

12 Pa | 1,84 kg/h | 215 °C | 4,9 g/s | 0,0943 % | 18 mg/Nm³ | 228 kg

BEF **KOMPAKT FEEL 8 CL/CP PASSIVE**

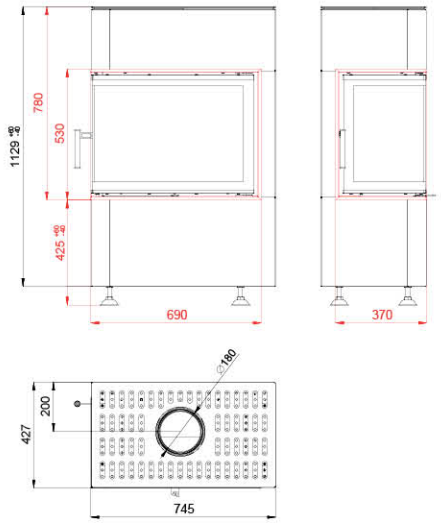

White
Pearl Beige
Latte
Mocca
Antracit
Bordeaux
Ferrari
Azzurro

5 - 8 kW | 84 % | 180 mm | 400 mm | 490 x 211 mm | 650 x 330 x 468 mm

12 Pa | 1,84 kg/h | 215 °C | 4,9 g/s | 0,0943 % | 18 mg/Nm³ | 195 kg

BEF **KOMPAKT THERM 6 PASSIVE**

White
Pearl Beige
Latte
Mocca
Antracit
Bordeaux
Ferrari
Azzurro

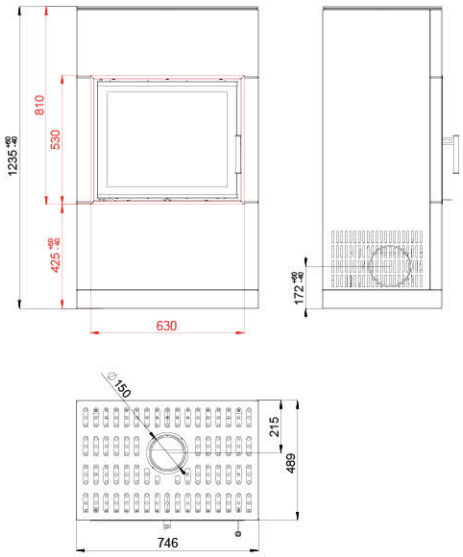

4 - 7 kW | 82 % | 150 mm | 330 mm | 435 x 295 mm | 570 x 468 mm

12 Pa | 1,85 kg/h | 262 °C | 4,6 g/s | 0,0873 % | 19 mg/Nm³ | 217 kg

BEF **KOMPAKT THERM 6 CL/CP PASSIVE**

White
Pearl Beige
Latte
Mocca
Antracit
Bordeaux
Ferrari
Azzurro

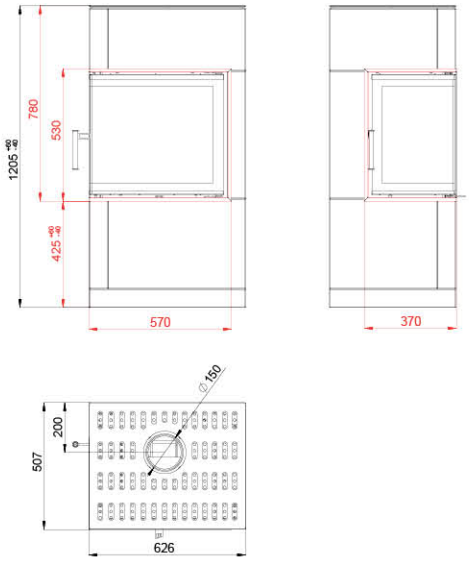

4 - 7 kW | 82 % | 150 mm | 330 mm | 395 x 295 mm | 530 x 330 x 468 mm

12 Pa | 1,85 kg/h | 262 °C | 4,6 g/s | 0,0873 % | 19 mg/Nm³ | 189 kg

BEF **KOMPAKT THERM 7 PASSIVE**

White
Pearl Beige
Latte
Mocca
Antracit
Bordeaux
Ferrari
Azzurro

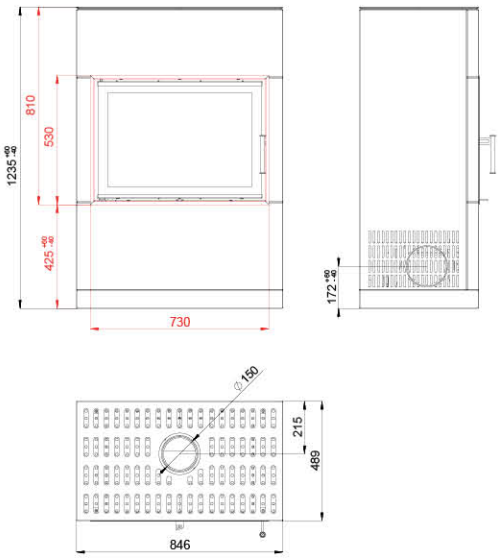

5 - 8 kW | 82 % | 150 mm | 400 mm | 520 x 295 mm | 670 x 468 mm

12 Pa | 2,05 kg/h | 264 °C | 5,6 g/s | 0,0868 % | 19 mg/Nm³ | 239 kg

BEF **KOMPAKT THERM 7 CL/CP PASSIVE**

White
Pearl Beige
Latte
Mocca
Antracit
Bordeaux
Ferrari
Azzurro

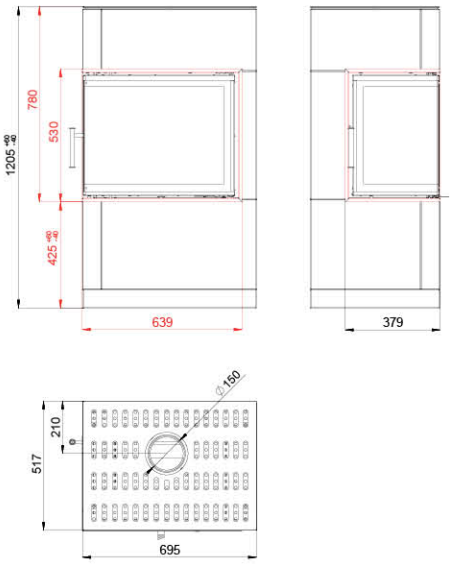

5 - 8 kW | 82 % | 150 mm | 330 mm | 465 x 295 mm | 600 x 340 x 468 mm

12 Pa | 2,05 kg/h | 264 °C | 5,6 g/s | 0,0868 % | 19 mg/Nm³ | 214 kg

BEF **KOMPAKT THERM 8 PASSIVE**

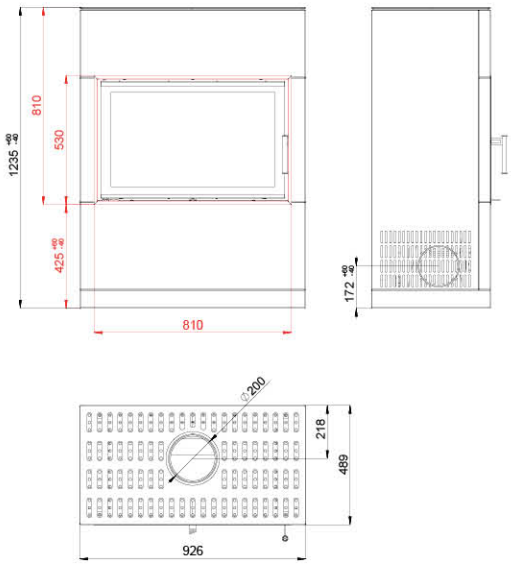

White
Pearl Beige
Latte
Mocca
Antracit
Bordeaux
Ferrari
Azzurro

7 - 10 kW | 84 % | 200 mm | 500 mm | 600 x 295 mm | 750 x 468 mm

12 Pa | 2,7 kg/h | 257 °C | 6 g/s | 0,0868 % | 18 mg/Nm³ | 256 kg

BEF **KOMPAKT THERM 8 CL/CP PASSIVE**

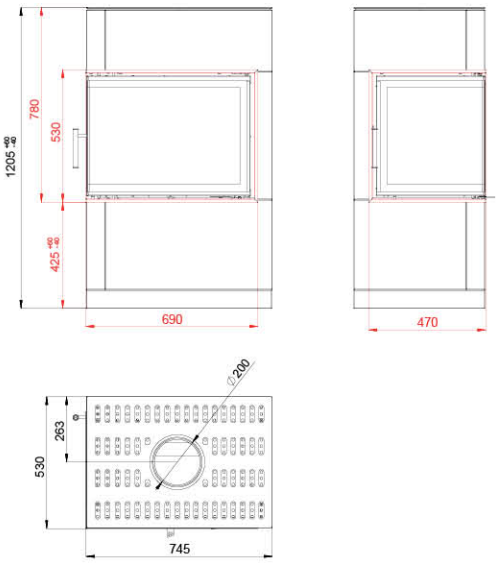

White
Pearl Beige
Latte
Mocca
Antracit
Bordeaux
Ferrari
Azzurro

7 - 10 kW | 84 % | 200 mm | 400 mm | 515 x 295 mm | 650 x 430 x 468 mm

12 Pa | 2,7 kg/h | 257 °C | 6 g/s | 0,0868 % | 18 mg/Nm³ | 226 kg

BEF **RUSTICAL**

16:9

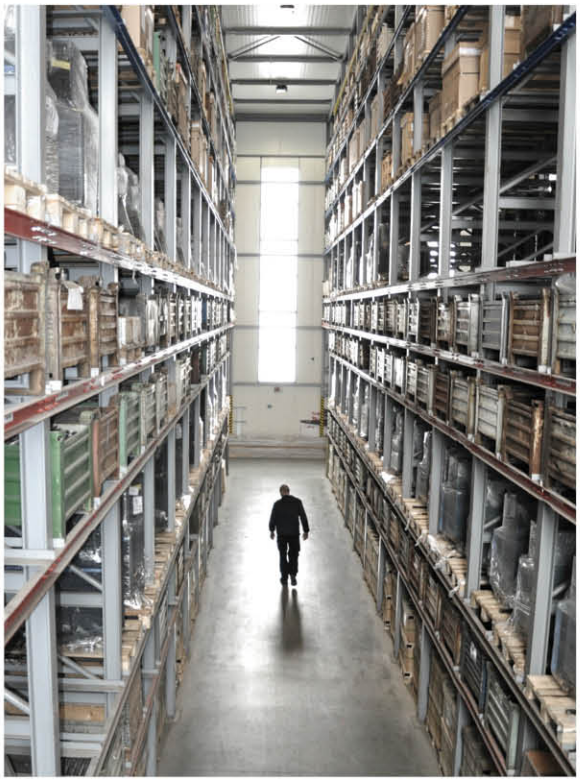

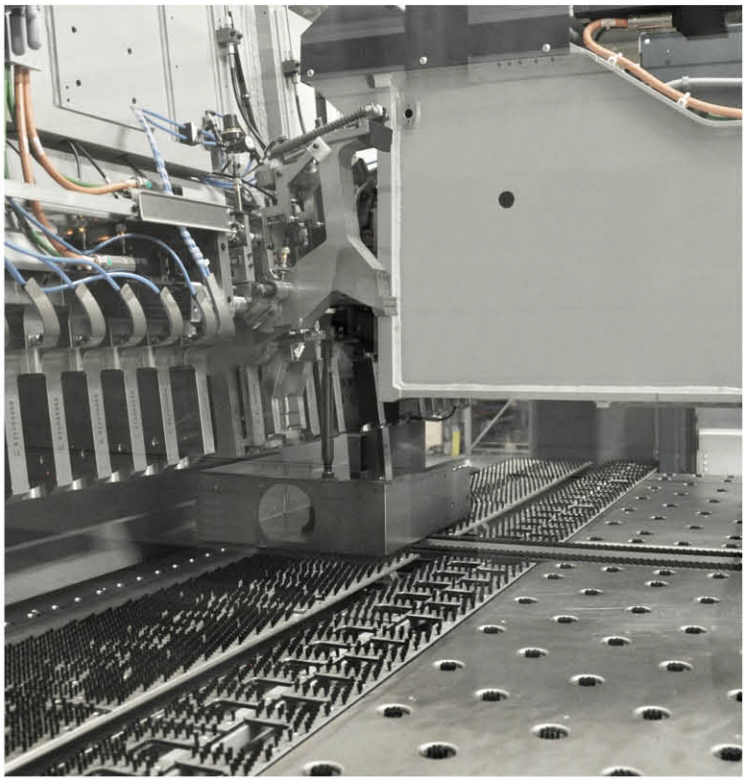

* These data are informative, the manufacturer reserves the right to change.